SECTION MA
MAINTENANCE

CONTENTS

PRECAUTION 3

PRECAUTIONS 3
Precaution for Supplemental Restraint System (SRS) "AIR BAG" and "SEAT BELT PRE-TENSIONER" 3

PREPARATION 4

PREPARATION 4
Special Service Tool 4
Commercial Service Tool 4

PERIODIC MAINTENANCE 5

GENERAL MAINTENANCE 5
Explanation of General Maintenance 5

PERIODIC MAINTENANCE 7
Introduction of Periodic Maintenance 7

RECOMMENDED FLUIDS AND LUBRICANTS 11
Fluids and Lubricants 11
SAE Viscosity Number 11
Anti-Freeze Coolant Mixture Ratio 12

ENGINE MAINTENANCE 13

DRIVE BELT 13
DRIVE BELT : Exploded View 13
DRIVE BELT : Removal and Installation 13
DRIVE BELT : Inspection 14
DRIVE BELT : Adjustment 14

ENGINE COOLANT 15
ENGINE COOLANT : Inspection 15
ENGINE COOLANT : Draining Engine Coolant 16
ENGINE COOLANT : Refilling 16
ENGINE COOLANT : Flushing Cooling System 18

FUEL LINES 18
FUEL LINES : Inspection 18

AIR CLEANER FILTER 18
AIR CLEANER FILTER : Exploded View 19
AIR CLEANER FILTER : Removal and Installation 19

ENGINE OIL 20
ENGINE OIL : Inspection 20
ENGINE OIL : Draining 21
ENGINE OIL : Refilling 21

OIL FILTER 22
OIL FILTER : Removal and Installation 22

SPARK PLUG 22
SPARK PLUG : Exploded View 23
SPARK PLUG : Removal and Installation 23

EVAP VAPOR LINES 25
EVAP VAPOR LINES : Inspection 25

CHASSIS AND BODY MAINTENANCE 26

EXHAUST SYSTEM 26
EXHAUST SYSTEM : Inspection 26

CVT FLUID 26
CVT FLUID : Inspection 26
CVT FLUID : Replacement 26
CVT FLUID : Adjustment 28

CLUTCH FLUID 29
CLUTCH FLUID : Inspection 29
CLUTCH FLUID : Draining 29
CLUTCH FLUID : Refilling 30

GEAR OIL 31
GEAR OIL : Inspection 31
GEAR OIL : Draining 31
GEAR OIL : Refilling 32

WHEELS 32
WHEELS : Inspection 32
WHEELS : Adjustment 32

BRAKE FLUID LEVEL AND LEAKS 34
BRAKE FLUID LEVEL AND LEAKS : Inspection ... 34

BRAKE LINES AND CABLES 34
BRAKE LINES AND CABLES : Inspection 34

BRAKE FLUID 35
BRAKE FLUID : Inspection 35
BRAKE FLUID : Draining 35
BRAKE FLUID : Refilling 35
BRAKE FLUID : Bleeding Brake System 36

DISC BRAKE 36
DISC BRAKE : Inspection 36
DISC BRAKE : Brake Burnishing 37
DISC BRAKE : Inspection 37

DRUM BRAKE 37
DRUM BRAKE : Inspection 38
DRUM BRAKE : Brake Burnishing 38
DRUM BRAKE : Inspection 38

STEERING GEAR AND LINKAGE 39
STEERING GEAR AND LINKAGE : Inspection 39

AXLE AND SUSPENSION PARTS 39
AXLE AND SUSPENSION PARTS : Inspection 39

DRIVE SHAFT 39
DRIVE SHAFT : Inspection 40

LOCKS, HINGES AND HOOD LATCH 40
LOCKS, HINGES AND HOOD LATCH : Exploded View 40
LOCKS, HINGES AND HOOD LATCH : Exploded View 41
LOCKS, HINGES AND HOOD LATCH : Exploded View 42
LOCKS, HINGES AND HOOD LATCH : Exploded View 42

SEAT BELT, BUCKLES, RETRACTORS, ANCHORS AND ADJUSTERS 43
SEAT BELT, BUCKLES, RETRACTORS, ANCHORS AND ADJUSTERS : Inspection 43

PRECAUTION

PRECAUTIONS

Precaution for Supplemental Restraint System (SRS) "AIR BAG" and "SEAT BELT PRE-TENSIONER"

INFOID:0000000009561081

The Supplemental Restraint System such as “AIR BAG” and “SEAT BELT PRE-TENSIONER”, used along with a front seat belt, helps to reduce the risk or severity of injury to the driver and front passenger for certain types of collision. Information necessary to service the system safely is included in the SR and SB section of this Service Manual.

WARNING:

- **To avoid rendering the SRS inoperative, which could increase the risk of personal injury or death in the event of a collision which would result in air bag inflation, all maintenance must be performed by an authorized NISSAN/INFINITI dealer.**
- **Improper maintenance, including incorrect removal and installation of the SRS, can lead to personal injury caused by unintentional activation of the system. For removal of Spiral Cable and Air Bag Module, see the SR section.**
- **Do not use electrical test equipment on any circuit related to the SRS unless instructed to in this Service Manual. SRS wiring harnesses can be identified by yellow and/or orange harnesses or harness connectors.**

PRECAUTIONS WHEN USING POWER TOOLS (AIR OR ELECTRIC) AND HAMMERS

WARNING:

- **When working near the Airbag Diagnosis Sensor Unit or other Airbag System sensors with the Ignition ON or engine running, DO NOT use air or electric power tools or strike near the sensor(s) with a hammer. Heavy vibration could activate the sensor(s) and deploy the air bag(s), possibly causing serious injury.**
- **When using air or electric power tools or hammers, always switch the Ignition OFF, disconnect the battery and wait at least three minutes before performing any service.**

PREPARATION

PREPARATION

Special Service Tool

INFOID:0000000009417493

The actual shapes of Kent-Moore tools may differ from those of special service tools illustrated here.

Tool number (Kent-Moore No.) Tool name	Description
KV991J0070 (J-45695) Coolant Refill Tool 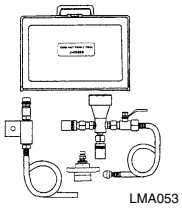 LMA053	Refilling engine cooling system

Commercial Service Tool

INFOID:0000000009417494

Tool name	Description
Power tool 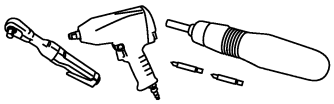 PIIB1407E	Loosening nuts, screws and bolts
KV10115801 (J-38956) Oil filter wrench 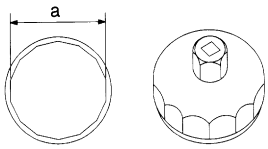 S-NT375	Removing oil filter **a: 64.3 mm (2.531 in)**
Spark plug wrench 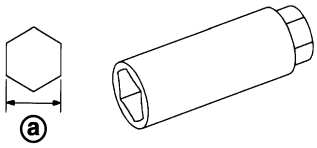 JPBIA0399ZZ	Removing and installing spark plug **a: 14 mm (0.55 in)**
Acoustic tension gauge PBIC3881E	Checking drive belt tension

PERIODIC MAINTENANCE

GENERAL MAINTENANCE

Explanation of General Maintenance

INFOID:0000000009417495

General maintenance includes those items which should be checked during the normal day-to-day operation of the vehicle. They are essential if the vehicle is to continue operating properly. The owners can perform the checks and inspections themselves or they can have their **NISSAN** dealers do them.

OUTSIDE THE VEHICLE

The maintenance items listed here should be performed from time to time, unless otherwise specified.

Item		Reference page
Tires	Check the pressure with a gauge often and always prior to long distance trips. Adjust the pressure in all tires, including the spare, to the specified pressure. Check carefully for damage, cuts or excessive wear.	WT-50
Wheel nuts	When checking the tires, make sure no nuts are missing, and check for any loose nuts. Tighten if necessary.	WT-45
Tire rotation	Tires should be rotated every 5,000 miles (8,000 km).	WT-42
Tire Pressure Monitor System (TPMS) transmitter components	Replace the TPMS transmitter grommet seal, valve core and cap when the tires are replaced due to wear or age.	WT-49
Wheel alignment and balance	If the vehicle should pull to either side while driving on a straight and level road, or if you detect uneven or abnormal tire wear, there may be a need for wheel alignment. If the steering wheel or seat vibrates at normal highway speeds, wheel balancing may be needed. For additional information regarding tires, refer to "Important Tire Safety Information" (United States) or "Tire Safety Information" (Canada) in the NISSAN Warranty Information Booklet.	WT-41 WT-42
Windshield	Clean the windshield on a regular basis. Check the windshield at least every six months for cracks or other damage. Repair as necessary.	GW-12
Windshield wiper blades	Check for cracks or wear if they do not wipe properly.	—
Doors and engine hood	Check that all doors and the engine hood operate smoothly as well as the trunk lid. Also make sure that all latches lock securely. Lubricate if necessary. Make sure that the secondary latch keeps the hood from opening when the primary latch is released. When driving in areas using road salt or other corrosive materials, check lubrication frequently.	MA-40 MA-41 MA-42 MA-42
Lamps	Make sure that the headlamps, stop lamps, tail lamps, turn signal lamps, and other lamps are all operating properly and installed securely. Also check headlamp aim. Clean the headlamps on a regular basis.	EXL-95

INSIDE THE VEHICLE

The maintenance items listed here should be checked on a regular basis, such as when performing periodic maintenance, cleaning the vehicle, etc.

Item		Reference page
Warning lamps and chimes	Make sure that all warning lamps and chimes are operating properly.	—
Windshield wiper and washer	Check that the wipers and washer operate properly and that the wipers do not streak.	WW-70 WW-66 WW-76 WW-78
Windshield defroster	Check that the air comes out of the defroster outlets properly and in sufficient quantity when operating the heater or air conditioning.	—
Steering wheel	Check that it has the specified play. Check for changes in the steering condition, such as excessive play, hard steering or strange noises. **Free play: Less than 35 mm (1.38 in)**	ST-5

Item		Reference page
Seats	Check seat position controls such as seat adjusters, seatback recliner, etc. to make sure they operate smoothly and that all latches lock securely in every position. Check that the head restraints move up and down smoothly and that the locks (if equipped) hold securely in all latched positions. Check that the latches lock securely for folding-down rear seatbacks.	—
Seat belts	Check that all parts of the seat belt system (e.g. buckles, anchors, adjusters and retractors) operate properly and smoothly and are installed securely. Check the belt webbing for cuts, fraying, wear or damage.	MA-43
Accelerator pedal	Check the pedal for smooth operation and make sure the pedal does not catch or require uneven effort. Keep the floor mats away from the pedal.	—
Brakes	Check that the brake does not pull the vehicle to one side when applied.	—
Brake pedal and booster	Check the pedal for smooth operation and make sure it has the proper distance under it when depressed fully. Check the brake booster function. Be sure to keep floor mats away from the pedal.	BR-8
Clutch pedal	Make sure the pedal operates smoothly and check that it has the proper free play.	CL-5
Parking brake	Check that the lever or pedal has the proper travel and make sure that the vehicle is held securely on a fairly steep hill when only the parking brake is applied.	PB-4
CVT "P" (Park) position mechanism	On a fairly steep hill check that the vehicle is held securely with the shift selector in the "P" (PARK) position without applying any brakes.	—

UNDER THE HOOD AND VEHICLE

The maintenance items listed here should be checked periodically (e.g. each time you check the engine oil or refuel).

Item		Reference page
Windshield washer fluid	Check that there is adequate fluid in the tank.	—
Engine coolant level	Check the coolant level when the engine is cold.	CO-8
Radiator and hoses	Check the front of the radiator and clean off any dirt, insects, leaves, etc., that may have accumulated. Make sure the radiator hoses have no cracks, deformation, deterioration or loose connections.	CO-12
Brake and clutch fluid levels	Make sure that the brake and clutch fluid levels are between the “MAX” and “MIN” lines on the reservoirs.	BR-11 CL-6
Battery	Check the fluid level in each cell. It should be between the “MAX” and “MIN” lines. Vehicles operated in high temperatures or under severe conditions require frequent checks of the battery fluid level.	PG-61
Engine drive belts	Make sure that no belt is frayed, worn, cracked or oily.	MA-14
Engine oil level	Check the level on the oil level gauge after parking the vehicle on a level spot and turning off the engine.	MA-20
Exhaust system	Make sure there are no loose supports, cracks or holes. If the sound of the exhaust seems unusual or there is a smell of exhaust fumes, immediately locate the trouble and correct it.	MA-26
Underbody	The underbody is frequently exposed to corrosive substances such as those used on icy roads or to control dust. It is very important to remove these substances, otherwise rust will form on the floor pan, frame, fuel lines and around the exhaust system. At the end of winter, the underbody should be thoroughly flushed with plain water, being careful to clean those areas where mud and dirt can easily accumulate.	—
Fluid leaks	Check under the vehicle for fuel, oil, water or other fluid leaks after the vehicle has been parked for a while. Water dripping from the air conditioner after use is normal. If you should notice any leaks or gasoline fumes are evident, check for the cause and correct it immediately.	—

PERIODIC MAINTENANCE

Introduction of Periodic Maintenance

INFOID:0000000009417496

The following tables show the normal maintenance schedule. Depending upon weather and atmospheric conditions, varying road surfaces, individual driving habits and vehicle usage, additional or more frequent maintenance may be required.

Periodic maintenance beyond the last period shown on the tables requires similar maintenance.

ENGINE AND EMISSION CONTROL MAINTENANCE

Abbreviations: I = Inspect and correct or replace as necessary, R = Replace, E = Check and correct the engine coolant mixture ratio

MAINTENANCE OPERATION		MAINTENANCE INTERVAL								
Perform either at number of miles, kilometers or months, whichever comes first.	Miles x 1,000 (km x 1,000) Months	5 (8) 6	10 (16) 12	15 (24) 18	20 (32) 24	25 (40) 30	30 (48) 36	35 (56) 42	40 (64) 48	45 (72) 48
Drive belts	NOTE (1)								I*	
Air cleaner filter	NOTE (2)						R			
EVAP vapor lines (with carbon canister)					I*				I*	
Fuel lines					I*				I*	
Fuel filter	NOTE (3)									
Engine coolant*	NOTE (4)(5)									
Engine oil		R	R	R	R	R	R	R	R	R
Engine oil filter (Use genuine NISSAN engine oil filter or equivalent)		R	R	R	R	R	R	R	R	R
Spark plugs (Iridium-tipped)	NOTE (6)	Replace every 105,000 miles (168,000 km)								
Intake & exhaust valve clearance	NOTE (7)									

MAINTENANCE OPERATION		MAINTENANCE INTERVAL								
Perform either at number of miles, kilometers or months, whichever comes first.	Miles x 1,000 (km x 1,000) Months	50 (80) 60	55 (88) 66	60 (96) 72	65 (104) 78	70 (112) 84	75 (120) 90	80 (128) 96	85 (136) 102	90 (144) 108
Drive belts	NOTE (1)	I*		I*		I*		I*		I*
Air cleaner filter	NOTE (2)			R						R
EVAP vapor lines (with carbon canister)				I*				I*		
Fuel lines				I*				I*		
Fuel filter	NOTE (3)									
Engine coolant*	NOTE (4)(5)									
Engine oil		R	R	R	R	R	R	R	R	R
Engine oil filter (Use genuine NISSAN engine oil filter or equivalent)		R	R	R	R	R	R	R	R	R
Spark plugs (Iridium-tipped)	NOTE (6)	Replace every 105,000 miles (168,000 km)								
Intake & exhaust valve clearance	NOTE (7)									

MAINTENANCE OPERATION		MAINTENANCE INTERVAL						Reference Page
Perform either at number of miles, kilometers or months, whichever comes first.	Miles x 1,000 (km x 1,000) Months	95 (152) 114	100 (160) 120	105 (168) 126	110 (176) 132	115 (184) 138	120 (192) 144	
Drive belts	NOTE (1)		I*		I*		I*	EM-17
Air cleaner filter	NOTE (2)						R	EM-19
EVAP vapor lines (with carbon canister)			I*				I*	EC-462
Fuel lines			I*				I*	FL-5
Fuel filter	NOTE (3)							—

MAINTENANCE OPERATION		MAINTENANCE INTERVAL						Reference Page
Perform either at number of miles, kilometers or months, whichever comes first.	Miles x 1,000 (km x 1,000) Months	95 (152) 114	100 (160) 120	105 (168) 126	110 (176) 132	115 (184) 138	120 (192) 144	
Engine coolant*	NOTE (4)(5)							CO-8
Engine oil		R	R	R	R	R	R	LU-7
Engine oil filter (Use genuine NISSAN engine oil filter or equivalent)		R	R	R	R	R	R	LU-10
Spark plugs (Iridium-tipped)	NOTE (6)	Replace every 105,000 miles (168,000 km)						EM-21
Intake & exhaust valve clearance	NOTE (7)							

NOTE:

(1) After 40,000 miles (64,000 km) or 48 months, inspect every 10,000 miles (16,000 km) or 12 months. Replace the drive belts if found damaged.

(2) If operating mainly in dusty conditions, more frequent maintenance may be required.

(3) Maintenance-free item. For service procedures, refer to FL section.

(4) First replacement interval is 105,000 miles (168,000 km) or 84 months. After first replacement, replace every 75,000 miles (120,000 km) or 60 months.

(5) Use only Genuine NISSAN Long Life Antifreeze / Coolant (blue) or equivalent with proper mixture ratio of 50% antifreeze and 50% demineralized or distilled water. Mixing any other type of coolant or the use of non-distilled water will reduce the life expectancy of the factory-fill coolant.

(6) Replace spark plug when the spark plug gap exceeds 1.35 mm (0.053 in), even if within specified periodic replacement mileage.

(7) Periodic maintenance is not required. However, if valve noise increases, inspect valve clearance.

: Maintenance items and intervals with “” are recommended by NISSAN for reliable vehicle operation. The owner need not perform such maintenance in order to maintain the emission warranty or manufacturer recall liability. Other maintenance items and intervals are required.

CHASSIS AND BODY MAINTENANCE

Abbreviations: R= Replace. I = Inspect. Correct or replace if necessary.

MAINTENANCE OPERATION		MAINTENANCE INTERVAL								
Perform either at number of miles, kilometers or months, whichever comes first.	Miles x 1,000 (km x 1,000) Months	5 (8) 6	10 (16) 12	15 (24) 18	20 (32) 24	25 (40) 30	30 (48) 36	35 (56) 42	40 (64) 48	45 (72) 54
Brake line & cables			I		I		I		I	
Brake pads, rotors & other brake components ★			I		I		I		I	
Brake fluid ★					R				R	
CVT fluid	NOTE (1)		I		I		I		I	
Manual transaxle oil	NOTE (2)		I		I		I		I	
Steering gear and linkage, axle and suspension parts, and front drive shafts ★					I				I	
Tire rotation	NOTE (3)									
Drive shaft boots★			I		I		I		I	
Exhaust system★					I				I	

MAINTENANCE OPERATION		MAINTENANCE INTERVAL								
Perform either at number of miles, kilometers or months, whichever comes first.	Miles x 1,000 (km x 1,000) Months	50 (80) 60	55 (88) 66	60 (96) 72	65 (104) 78	70 (112) 84	75 (120) 90	80 (128) 96	85 (136) 102	90 (144) 108
Brake line & cables		I		I		I		I		I
Brake pads, rotors & other brake components ★		I		I		I		I		I
Brake fluid ★				R				R		

MAINTENANCE OPERATION		MAINTENANCE INTERVAL								
Perform either at number of miles, kilometers or months, whichever comes first.	Miles x 1,000 (km x 1,000) Months	50 (80) 60	55 (88) 66	60 (96) 72	65 (104) 78	70 (112) 84	75 (120) 90	80 (128) 96	85 (136) 102	90 (144) 108
CVT fluid	NOTE (1)	I		I		I		I		I
Manual transaxle oil	NOTE (2)	I		I		I		I		I
Steering gear and linkage, axle and suspension parts, and front drive shafts ★				I				I		
Tire rotation	NOTE (3)									
Drive shaft boots★		I		I		I		I		I
Exhaust system★				I				I		

MAINTENANCE OPERATION		MAINTENANCE INTERVAL						Reference Page
Perform either at number of miles, kilometers or months, whichever comes first.	Miles x 1,000 (km x 1,000) Months	95 (152) 114	100 (160) 120	105 (168) 126	110 (176) 132	115 (184) 138	120 (192) 90	
Brake line & cables			I		I		I	MA-34
Brake pads, rotors & other brake components ★			I		I		I	MA-36 MA-38
Brake fluid ★					R			MA-35
CVT fluid	NOTE (1)		I		I		I	MA-26
Manual transaxle oil	NOTE (2)		I		I		I	TM-17
Steering gear and linkage, axle and suspension parts, and front drive shafts ★					I			MA-39 MA-39 MA-40
Tire rotation	NOTE (3)							MA-32
Drive shaft boots★			I		I		I	FAX-8
Exhaust system★					I			EX-4

NOTE:

- **Maintenance items with "★" should be performed more frequently according to "Maintenance Under Severe Driving Conditions".**
- (1) Use only Genuine NISSAN CVT fluid (NS-3). If towing a trailer, using a camper or a car-top carrier, of driving on rough or muddy roads, inspect CVT fluid deterioration at NISSAN dealers every 100,000 km (60,000 miles), then change CVT fluid NS-3 if necessary. And if the inspection is not performed, change (not just inspect) CVT fluid NS-3 every 100,000 km (60,000 miles). Using transmission fluid other than Genuine NISSAN CVT fluid NS-3 will damage the CVT, which is not covered by the warranty.
- (2) If tower a trailer, using a camper or car-top carrier, or driving on rough or muddy roads, change (not just inspect) oil at every 20,000 miles (32,000 km) or 24 months.
- (3) Refer to "Tire rotation" under "GENERAL MAINTENANCE" heading earlier in this section.

MAINTENANCE UNDER SEVERE DRIVING CONDITIONS

The maintenance intervals shown on the preceding pages are for normal operating conditions. If the vehicle is mainly operated under severe driving conditions as shown below, more frequent maintenance must be performed on the following items as shown in the table.

Severe driving conditions

- Repeated short trips of less than 5 miles (8 km).
- Repeated short trips of less than 10 miles (16 km) with outside temperatures remaining below freezing.
- Operating in hot weather in stop-and-go "rush hour" traffic.
- Extensive idling and/or low speed driving for long distances, such as police, taxi or door-to-door delivery use.
- Driving in dusty conditions.
- Driving on rough, muddy, or salt spread roads.
- Towing a trailer, using a camper or a car-top carrier

Maintenance operation: Check = Check and correct or replace as necessary.

Maintenance item	Maintenance operation	Maintenance interval	Reference page
Brake fluid	Replace	Every 16,000 miles (10,000 km) or 12 months	BR-11 BR-11
Brake pads, rotors, drums & linings	Inspect	Every 5,000 miles (8,000 km) or 6 months	MA-36 MA-38
Steering gear & linkage, axle & suspension parts	Inspect	Every 5,000 miles (8,000 km) or 6 months	MA-39 MA-39 MA-40
Drive shaft boots	Inspect	Every 5,000 miles (8,000 km) or 6 months	MA-40
Exhaust system	Inspect	Every 5,000 miles (8,000 km) or 6 months	MA-26

RECOMMENDED FLUIDS AND LUBRICANTS

Fluids and Lubricants

INFOID:0000000009417499

Description			Capacity (Approximate)			Recommended Fluids/Lubricants
			Metric	US measure	Imp measure	
Fuel			41.0 ℓ	10-7/8 gal	9 gal	Unleaded gasoline with an octane rating of at least 87 AKI (RON 91)
Engine oil Drain and refill	With oil filter change		3.5 ℓ	3-3/4 qt	3-1/8 qt	• Engine oil with API Certification Mark *1 • Viscosity SAE 5W-30*2
	Without oil filter change		3.2 ℓ	3-3/8 qt	2-7/8 qt	
Dry engine (engine overhaul)			3.5 ℓ	3-3/4 qt	3-1/8 qt	
Cooling system	With reservoir tank at “MAX” level	CVT	7.3 ℓ	7-3/4 qt	6-3/8 qt	Pre-diluted Genuine NISSAN Long Life Anti-freeze / Coolant (blue) or equivalent
		M/T	6.7 ℓ	7-1/8 qt	5-7/8 qt	
	Reservoir tank capacity (at “MAX” level)		0.7 ℓ	3/4 qt	5/8 qt	
Manual transaxle fluid (MTF)			2.67 ℓ	5-5/8 pt	4-3/4 pt	Genuine NISSAN Manual Transmission Fluid (MTF) HQ Multi 75W-85, or equivalent *3
CVT fluid			6.9 ℓ	7-1/4 qt	6-1/8 qt	Genuine NISSAN CVT Fluid NS-3 *4
Brake and clutch fluid			—	—	—	Genuine NISSAN Super Heavy Duty Brake Fluid *5 or equivalent DOT 3 (US FMVSS No. 116)
Multi-purpose grease			—	—	—	NLGI No. 2 (Lithium soap base)
Windshield washer fluid			4.2 ℓ	4-1/2 qt	3-3/4 qt	Genuine NISSAN Windshield Washer Concentrate Cleaner & Anti-Freeze or equivalent
Air conditioning system refrigerant			0.4 kg	0.9 lb	0.9 lb	HFC-134a (R-134a) *6
Air conditioning system oil			110 - 130 mℓ	3.7 - 4.4 fl oz	3.9 - 4.6 fl oz	A/C System Oil Type R (DH-PR) *6

*1: For additional information, see “Engine Oil Recommendation”.

*2: As an alternative to this recommended oil, SAE 5W-30 or SAE 10W-30 conventional petroleum based oils may be used and meet all specifications and requirements necessary to maintain the New Vehicle Limited Warranty.

*3: If Genuine NISSAN Manual Transmission Fluid (MTF) HQ Multi is not available, API GL-4, Viscosity SAE 75W-85 may be used as a temporary replacement. However use Genuine NISSAN Manual Transmission Fluid (MTF) HQ Multi as soon as it is available.

*4: **Use only Genuine NISSAN CVT Fluid NS-3. Using transmission fluid other than Genuine NISSAN CVT Fluid NS-3 will damage the CVT, which is not covered by the NISSAN new vehicle limited warranty.**

*5: Available in mainland U.S.A. through a NISSAN dealer.

*6: For further details, see “Air conditioner specification label”.

SAE Viscosity Number

INFOID:0000000009417500

NISSAN recommends the use of an energy conserving oil in order to improve fuel economy.
Select only engine oils that meet the American Petroleum Institute (API) certification and International Lubrication Standardization and Approval Committee (ILSAC) certification and SAE viscosity standard. These oils have the API certification mark on the front of the container. Oils which do not have the specified quality label should not be used as they could cause engine damage.

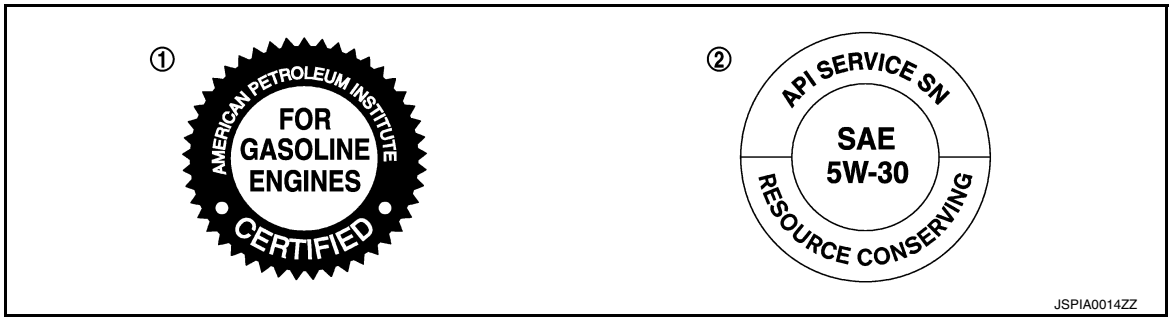

1. API certification mark
2. API service symbol

Anti-Freeze Coolant Mixture Ratio

INFOID:0000000009417501

The engine cooling system is filled at the factory with a pre-diluted mixture of 50% Genuine NISSAN Long Life Antifreeze/Coolant (blue) and 50% water to provide year-round anti-freeze and coolant protection. The anti-freeze solution contains rust and corrosion inhibitors. Additional engine cooling system additives are not necessary.

WARNING:

Do not remove the radiator cap when the engine is hot. Serious burns could occur from high-pressure engine coolant escaping from the radiator. Wrap a thick cloth around the radiator cap. Slowly turn it a quarter of a turn to release built-up pressure. Carefully remove radiator cap by turning it all the way.

CAUTION:

- **When adding or replacing coolant, be sure to use only Genuine NISSAN Long Life Antifreeze/Coolant (blue) or equivalent. Genuine NISSAN Long Life Antifreeze/Coolant (blue) is pre-diluted to provide antifreeze protection to -34°F (-37°C). If additional freeze protection is needed due to weather where the vehicle is operated, add Genuine NISSAN long life Antifreeze/Coolant (blue) concentrate following the directions on the container. If an equivalent coolant other than Genuine NISSAN Long Life Antifreeze/Coolant (blue) is used, follow the coolant manufacturer's instructions to maintain minimum antifreeze protection to -34°F (-37°C). The use of other types of coolant solutions other than Genuine NISSAN Long Life Antifreeze/Coolant (blue) or equivalent may damage the engine cooling system.**
- **Mixing any other type of coolant other than Genuine NISSAN Long Life Antifreeze/Coolant (blue), including Genuine NISSAN Long Life Antifreeze/Coolant (green), or the use of non-distilled water will reduce the life expectancy of the factory filled coolant.**

ENGINE MAINTENANCE

DRIVE BELT

DRIVE BELT : Exploded View

INFOID:0000000009681902

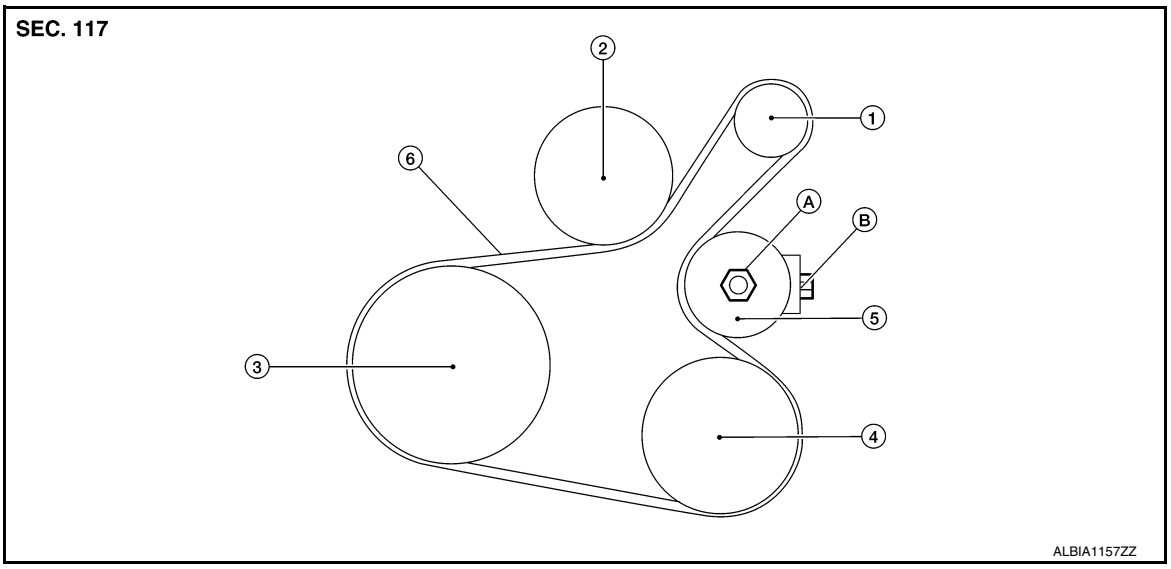

1. Generator
2. Water pump
3. Crankshaft pulley
4. A/C compressor (with A/C models) Idler pulley (without A/C models)
5. Tensioner idler pulley
6. Drive belt

DRIVE BELT : Removal and Installation

INFOID:0000000009681903

REMOVAL

1. Remove engine undercover. Refer to EXT-37, "FRONT UNDER COVER : Removal and Installation".
2. Remove wheel and tire (RH) using a power tool. Refer to WT-45, "Removal and Installation".
3. Partially remove the fender protector (RH). Refer to EXT-36, "Removal and Installation".
4. Loosen the lock nut and then release the belt tension by turning the adjusting bolt.
5. Remove the drive belt.

INSTALLATION

1. Pull the idler pulley in the loosening direction, and then temporarily tighten the lock nut to the following torque.

   Lock nut (Temporary tightening) : **4.4 N·m (0.45 kg-m, 39 in-lb)**

   NOTE:
   Do not move the lock nut from the temporary tightened position. Go to step 2.
2. Install the drive belt on each pulley.
   CAUTION:
   - **Check that there is no engine oil, grease, or engine coolant, etc. in pulley grooves.**
   - **Check that the belt seats securely inside the groove on each pulley.**
3. Adjust drive belt tension by turning the adjusting bolt. Refer to MA-14, "DRIVE BELT : Adjustment".
   CAUTION:
   - **Perform the belt tension adjustment with the lock nut temporarily tightened to the torque specification listed in step 1 which prevents the idler pulley from tilting.**
   - **When checking immediately after installation, first adjust it to the specified value. Then, after turning crankshaft two turns or more, readjust to the specified value to avoid variation in deflection between pulleys.**

4. Tighten the lock nut to final tightening specification.

Lock nut (Final tightening) : 34.8 N·m (3.5 kg-m, 26 ft-lb)

5. Check that belt tension is within the specification using suitable tool. Refer to EM-115, "Drive Belt".

DRIVE BELT : Inspection

INFOID:0000000009681904

- Inspection should be done only when engine is cold or over 30 minutes after the engine is stopped.

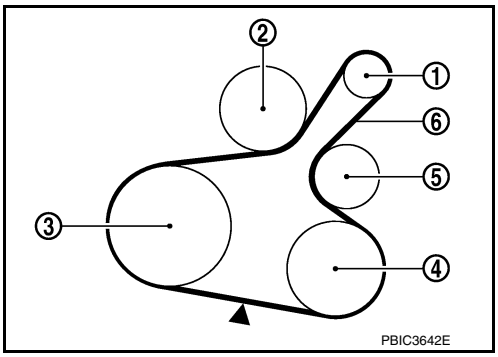

(1) : Generator
(2) : Water pump
(3) : Crankshaft pulley
(4) : A/C compressor (with A/C models)
Idler pulley (without A/C models)
(5) : Idler pulley
(6) : Drive belt

- Visually check belt for wear, damage, and cracks on inside and edges.
- Turn crankshaft pulley clockwise twice, and check that the tension on all pulleys equalizes before testing.
- When measuring deflection, apply 98.1 N (10 kg, 22 lb) at the (▼) marked point.
- Measure the belt tension and frequency using suitable tool at the (▼) marked point.

CAUTION:

- **When checking immediately after installation, first adjust it to the specified value. Then, after turning crankshaft two turns or more, readjust to the specified value to avoid variation in deflection between pulleys.**

Belt deflection/belt tension and frequency : Refer to EM-115, "Drive Belt".

DRIVE BELT : Adjustment

INFOID:0000000009681905

Location	Location of adjuster and tightening method
Drive belt	Adjusting bolt on idler pulley

CAUTION:

- **When belt is replaced with new one, adjust belt tension to the value for “New belt,” because new belt will not fully seat in the pulley groove.**
- **When tension of the belt being used exceeds “Limit,” adjust it to the value for “After adjusted.”**
- **When installing a belt, check it is correctly engaged with the pulley groove.**
- **Do not allow engine oil or engine coolant to get on the belt.**
- **Do not twist or bend the belt strongly.**

1. Partially remove the fender protector (RH) front side clip. Refer to EXT-36, "Removal and Installation".
2. Loosen lock nut (A) and temporarily set to the following torque.

Lock nut (A) (Temporary tightening) : 4.4 N·m (0.45 kg-m, 39 in-lb)

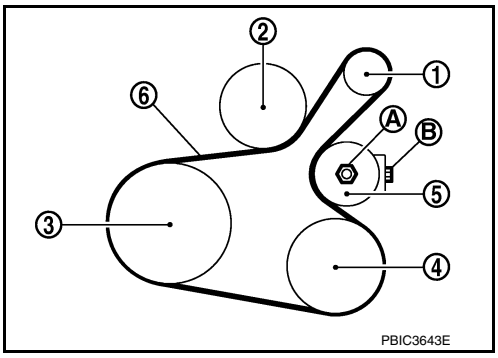

(1) : Generator
(2) : Water pump
(3) : Crankshaft pulley
(4) : A/C compressor (with A/C models)
Idler pulley (without A/C models)
(5) : Idler pulley
(6) : Drive belt
(B) : Adjusting bolt

3. Adjust the belt tension by turning the adjusting bolt. Refer to EM-115, "Drive Belt".
   CAUTION:
   - **When checking immediately after installation, first adjust it to the specified value. Then, after turning crankshaft two turns or more, readjust to the specified value to avoid variation in deflection between pulleys.**
   - **When the tension adjustment is performed, the lock nut should be in the condition at Step 2. If the tension adjustment is performed when the lock nut is loosened more than the temporary tightening, the idler pulley tilts and the correct tension adjustment cannot be performed.**
4. Tighten the lock nut to final tightening specification.

Lock nut (Final tightening) : 34.8 N·m (3.5 kg-m, 26 ft-lb)

ENGINE COOLANT

ENGINE COOLANT : Inspection

INFOID:0000000009681906

CHECKING COOLING SYSTEM HOSES

Check hoses for the following:
- Improper attachment
- Leaks
- Cracks
- Damage
- Loose connections
- Chafing
- Deterioration

CHECKING RESERVOIR LEVEL

- Check that the reservoir tank engine coolant level is within the MAX (A) to MIN (B) range when the engine is cool.
- Adjust the engine coolant level if necessary.
  CAUTION:
  Refill the engine cooling system with the specified coolant or equivalent. Refer to MA-11, "Fluids and Lubricants".

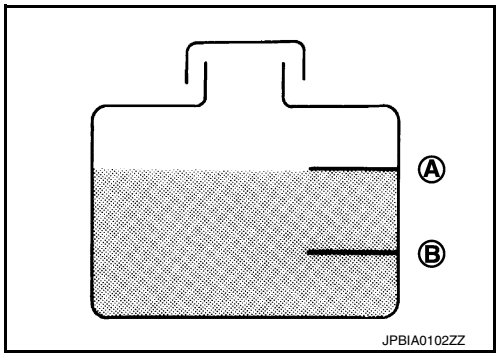

CHECKING COOLING SYSTEM FOR LEAKS

WARNING:
Do not remove the radiator cap when the engine is hot. Serious burns could occur from high-pressure engine coolant escaping from the radiator. Wrap a thick cloth around the cap. Slowly push down and turn it a quarter turn to allow built-up pressure to escape. Carefully remove the cap by pushing it down and turning it all the way.

CAUTION:
- **Perform this step when the engine is cold.**
- **Do not spill engine coolant on drive belt.**

To check for leaks, apply pressure to the cooling system using suitable tool (A) and Tool (B).

Tool number (B) : EG17650301 (J-33984-A)

Testing pressure : Refer to CO-12, "RADIATOR : Inspection".

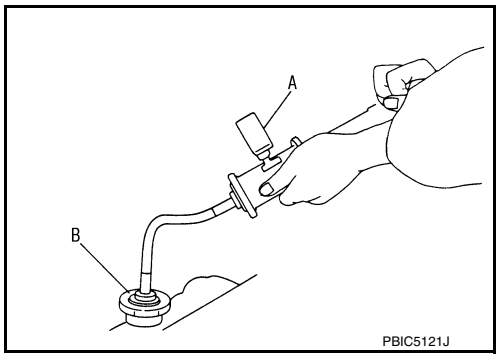

ENGINE COOLANT : Draining Engine Coolant

INFOID:0000000009681907

WARNING:
Do not remove the radiator cap when the engine is hot. Serious burns could occur from high-pressure engine coolant escaping from the radiator. Wrap a thick cloth around the cap. Slowly push down and turn it a quarter turn to allow built-up pressure to escape. Carefully remove the cap by pushing it down and turning it all the way.

1. Remove front under cover. Refer to EXT-37, "FRONT UNDER COVER : Removal and Installation".
2. Connect a suitable hose to the radiator drain plug.
   - Use a suitable hose with the dimensions as shown.

   Diameter (A) : 0.8 mm (0.31 in)
   Length (B) : 300 mm (11.81 in)

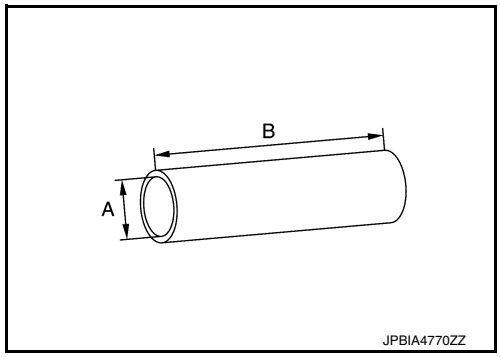

3. Open radiator drain plug (A) at the bottom of radiator, and then remove radiator cap.
   (B): Suitable hose
   ⇦: Front
   CAUTION:
   - **Perform this step when engine is cold.**
   - **Do not spill engine coolant on the drive belt.**

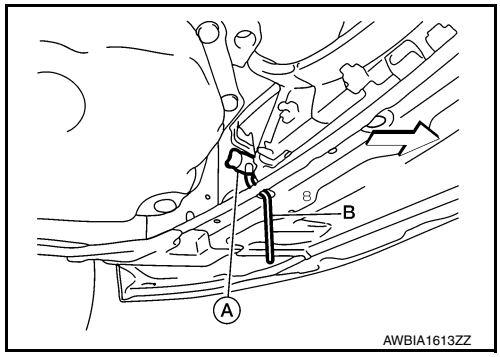

4. It is necessary to drain the cylinder block when draining all of engine coolant in the system. To drain the cylinder block, open the water drain plugs on cylinder block. Refer to EM-92, "Exploded View".
5. Remove reservoir tank if necessary, and drain engine coolant and clean reservoir tank before installing. Refer to CO-14, "Exploded View".
6. Check drained engine coolant for contaminants such as rust, corrosion or discoloration. If contaminated, flush the engine cooling system. Refer to MA-18, "ENGINE COOLANT : Flushing Cooling System".

ENGINE COOLANT : Refilling

INFOID:0000000009681908

1. Install the radiator drain plug. Install the reservoir tank and cylinder block drain plug, if removed for a total system drain or for engine removal or repair.
   - **The radiator must be completely empty of engine coolant and water.**
   - **Apply sealant to the threads of the cylinder block drain plug. Use Genuine High Performance Thread Sealant or equivalent. Refer to MA-11, "Fluids and Lubricants".**

   Radiator drain plug : Refer to CO-14, "Exploded View".

2. If disconnected, reattach the upper radiator hose at the engine side.
3. Set the vehicle heater controls to the full HOT and heater ON position. Turn the vehicle ignition ON with the engine OFF as necessary to activate the heater mode.

4. Install the Tool by installing the radiator cap adapter onto the radiator neck opening. Then attach the gauge body assembly with the refill tube and the venturi assembly to the radiator cap adapter.

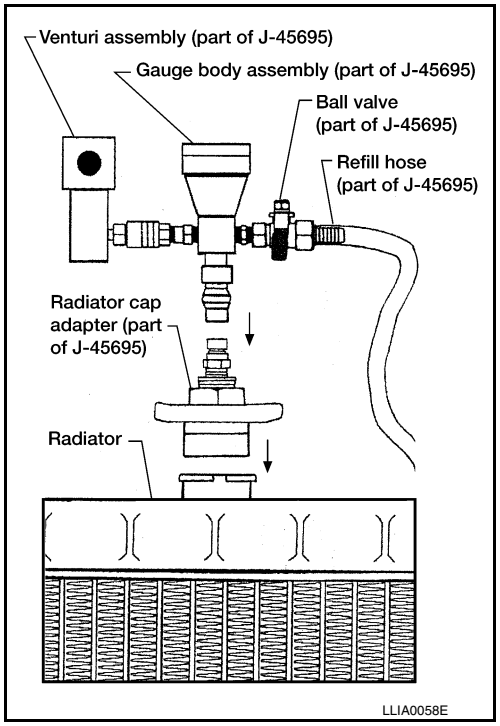

Tool number : KV991J0070 (J-45695)

5. Insert the refill hose into the engine coolant mixture container that is placed at floor level. Make sure the ball valve is in the closed position.
   - **Use recommended engine coolant or equivalent. Refer to** MA-11, "Fluids and Lubricants".

Engine coolant capacity (with reservoir tank) : Refer to MA-11, "Fluids and Lubricants".

CAUTION:
Do not use any cooling system additives such as radiator sealer. Additives may clog the cooling system and cause damage to the engine, transmission and/or cooling system.

6. Install an air hose to the venturi assembly, the air pressure must be within specification.

Compressed air supply pressure : 549 - 824 kPa (5.6 - 8.4 kg/cm^2, 80 - 119 psi)

CAUTION:
The compressed air supply must be equipped with an air dryer.

7. The vacuum gauge will begin to rise and there will be an audible hissing noise. During this process open the ball valve on the refill hose slightly. Engine coolant will be visible rising in the refill hose. Once the refill hose is full of engine coolant, close the ball valve. This will purge any air trapped in the refill hose.

8. Continue to draw the vacuum until the gauge reaches 28 inches of vacuum. The gauge may not reach 28 inches in high altitude locations, use the vacuum specifications based on the altitude above sea level.

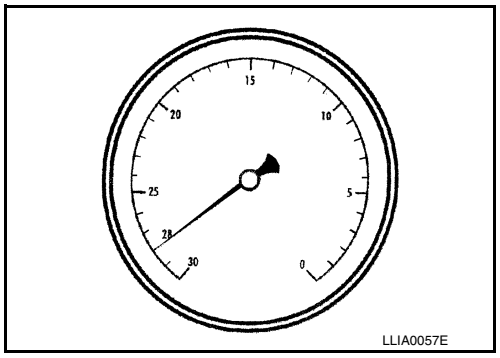

Altitude above sea level	Vacuum gauge reading
0 - 100 m (328 ft)	: 28 inches of vacuum
300 m (984 ft)	: 27 inches of vacuum
500 m (1,641 ft)	: 26 inches of vacuum
1,000 m (3,281 ft)	: 24 - 25 inches of vacuum

9. When the vacuum gauge has reached the specified amount, disconnect the air hose and wait 20 seconds to see if the system loses any vacuum. If the vacuum level drops, perform any necessary repairs to the system and repeat steps 6 - 8 to bring the vacuum to the specified amount. Recheck for any leaks.
10. Place the engine coolant container (with the refill hose inserted) at the same level as the top of the radiator. Then open the ball valve on the refill hose so the engine coolant will be drawn up to fill the cooling system. The cooling system is full when the vacuum gauge reads zero.
    CAUTION:
    Do not allow the engine coolant container to get too low when filling, to avoid air from being drawn into the cooling system.
11. Remove the Tool from the radiator neck opening.
12. Fill the cooling system reservoir tank to the specified level and install the radiator cap. Run the engine to warm up the cooling system and top up the system as necessary.
13. Install the front under cover. Refer to EXT-37, "FRONT UNDER COVER : Removal and Installation".

ENGINE COOLANT : Flushing Cooling System

INFOID:0000000009681909

1. Install radiator drain plug and reservoir tank, if removed.

   Radiator drain plug : Refer to CO-14, "Exploded View".

   CAUTION:
   Be sure to clean drain plug and install with new O-ring.
2. If water drain plugs on cylinder block were removed, close and tighten them. Refer to EM-92, "Exploded View".
3. Remove air duct from between air cleaner case and electric throttle control actuator. Refer to EM-26, "Removal and Installation".
4. Disconnect heater hose (1) at location (⬅) as shown.
   - Position heater hose as high as possible.

   ⇦: Front

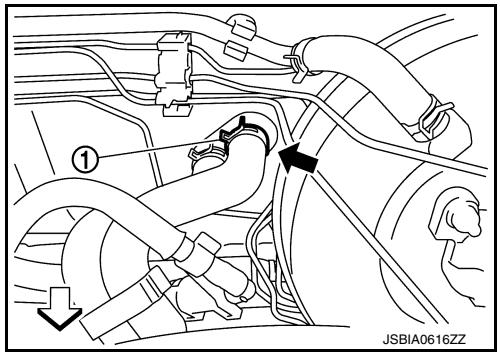

5. Fill radiator until engine coolant flows out of the disconnected heater hose and then reconnect the heater hose.
6. Finish filling the engine and reservoir tank with water and reinstall the radiator cap.
7. Install air duct in between air cleaner case and electric throttle control actuator. Refer to EM-26, "Removal and Installation".
8. Run the engine and warm it up to normal operating temperature.
9. Rev the engine two or three times under no-load.
10. Stop the engine and wait until it cools down.
11. Drain water from the system. Refer to MA-16, "ENGINE COOLANT : Draining Engine Coolant".
12. Repeat steps 1 through 11 until clear water begins to drain from radiator.

FUEL LINES

FUEL LINES : Inspection

INFOID:0000000009417509

Inspect fuel lines, fuel filler cap, and fuel tank for improper attachment, leakage, cracks, damage, loose connections, chafing or deterioration.

(A) : Engine
(B) : Fuel line
(C) : Fuel tank

If necessary, repair or replace damaged parts.

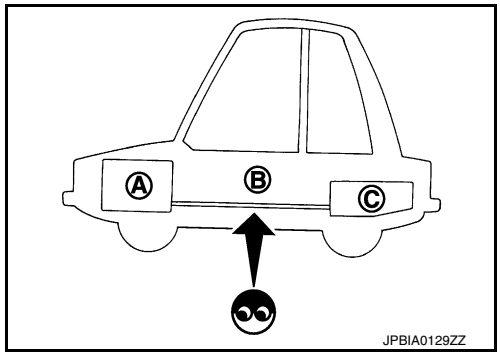

AIR CLEANER FILTER

AIR CLEANER FILTER : Exploded View

INFOID:0000000009681910

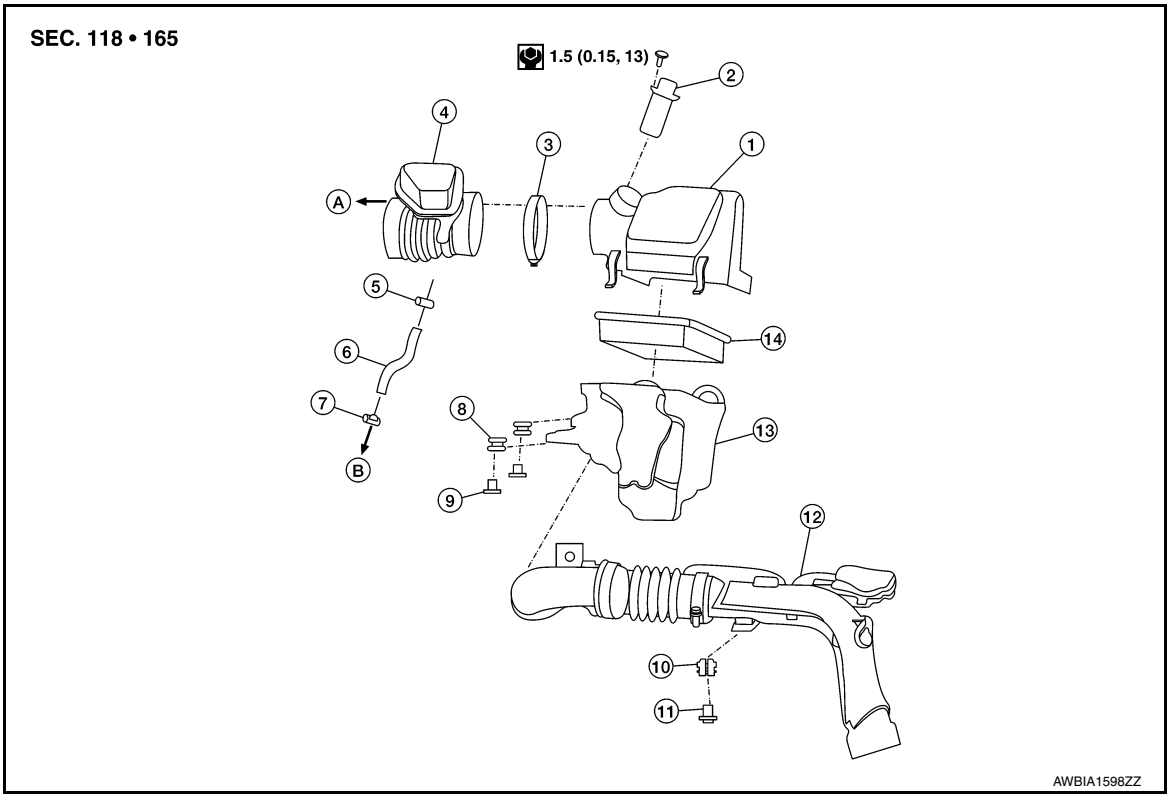

1. Air cleaner cover	2. Mass air flow sensor	3. Clamp
4. Air duct	5. Clamp	6. Hose
7. Clamp	8. Grommet	9. Grommet insert
10. Grommet	11. Grommet insert	12. Air duct inlet
13. Air cleaner body	14. Air cleaner filter	A. To electric throttle control actuator
B. To rocker cover		

AIR CLEANER FILTER : Removal and Installation

INFOID:0000000009681911

REMOVAL

1. Unhook clips (A) and pull the air cleaner cover (1) upward.

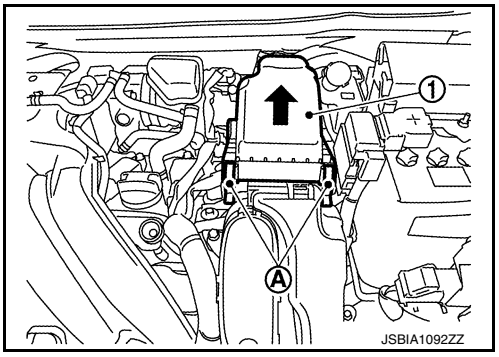

2. Remove the air cleaner filter (1) from the air cleaner body.

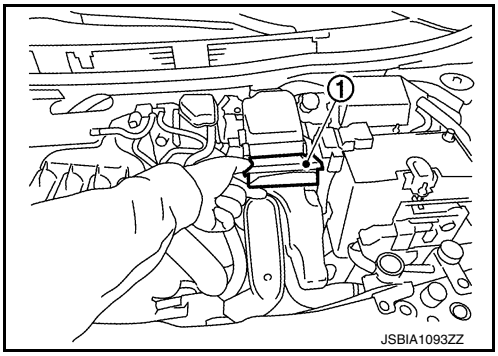

INSTALLATION

Installation is in the reverse order of removal.

NOTE:

Check that the air cleaner filter is securely placed in the air cleaner body.

ENGINE OIL

ENGINE OIL : Inspection

INFOID:0000000009681912

ENGINE OIL LEVEL

NOTE:

Before starting engine, position the vehicle so that it is level and check the engine oil level. If engine is already started, stop it and allow 10 minutes before checking.

1. Pull out oil level gauge and wipe it clean.
2. Insert oil level gauge and check that the engine oil level is within the range (A) as shown.
3. If it is out of range, adjust it.

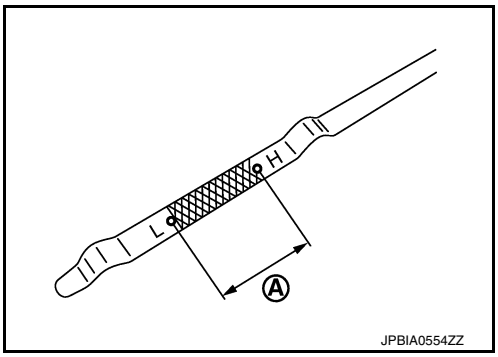

ENGINE OIL APPEARANCE

- Check engine oil for white milky appearance or excessive contamination.
- If engine oil becomes turbid and white, it is highly probable that it is contaminated with engine coolant. Repair or replace damaged parts.

ENGINE OIL LEAKS

Check for engine oil leaks around the following areas:

- Oil pan (upper and lower)
- Oil pan drain plug
- Oil pressure sensor
- Oil filter
- Oil cooler
- Oil level sensor
- Engine oil temperature sensor
- Intake valve timing control solenoid valve
- Exhaust valve timing control solenoid valve
- Mating surface between front cover and rocker cover
- Mating surface between cylinder block and cylinder head
- Mating surface between cylinder head and rocker cover
- Crankshaft oil seals (front and rear)
- Front cover

ENGINE OIL PRESSURE CHECK

WARNING:
- **Be careful not to burn yourself, as engine oil may be hot.**
- **When checking engine oil pressure, shift selector should be in the "P" (Park) or "N" (Neutral) position, and apply parking brake securely.**

1. Check engine oil level.
2. Disconnect harness connector at oil pressure switch. Remove oil pressure switch using suitable tool and install suitable tools (A/B).
   CAUTION:
   Do not drop or shock oil pressure switch.

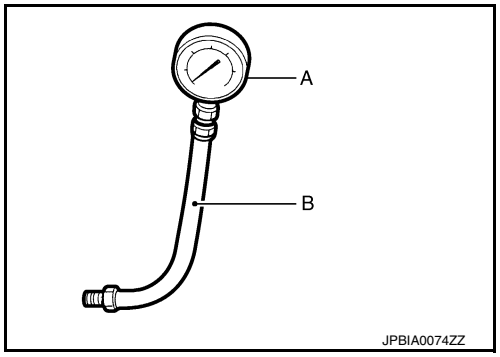

3. Start engine and warm it up to normal operating temperature.
4. Check engine oil pressure with engine running under no-load.
   NOTE:
   - When engine oil temperature is low, engine oil pressure becomes high.
   - If difference is extreme, check oil passage and oil pump for engine oil leaks.

   Engine oil pressure : Refer to LU-15, "Engine Oil Pressure".

5. After the inspections, install oil pressure switch as follows:

a. Remove old liquid gasket adhering to oil pressure switch and engine.

b. Apply liquid gasket and tighten oil pressure switch to specification.
   Use Genuine Liquid Gasket or equivalent. Refer to GI-22, "Recommended Chemical Products and Sealants".

   Tightening torque : Refer to EM-34, "Exploded View".

6. Check engine oil level.
7. After warming up engine, check that there is no engine oil leaks with the running engine.

ENGINE OIL : Draining

INFOID:0000000009681913

WARNING:
- **Be careful not to get burned, as engine oil may be hot.**
- **Prolonged and repeated contact with used engine oil may cause skin cancer. Try to avoid direct skin contact with used engine oil. If skin contact is made, wash thoroughly with soap or hand cleaner as soon as possible.**

1. Warm up the engine, park the vehicle on a level surface and check for engine oil leaks. Refer to MA-20, "ENGINE OIL : Inspection".
2. Stop the engine and wait for 10 minutes.
3. Loosen oil filler cap.
4. Remove drain plug and then drain engine oil.

ENGINE OIL : Refilling

INFOID:0000000009681914

1. Install drain plug with new copper sealing washer. Refer to EM-34, "Exploded View".
   CAUTION:
   - **Be sure to clean drain plug.**
   - **Do not reuse copper sealing washer.**
2. Refill with new engine oil.

Engine oil capacity and viscosity : **Refer to MA-11, "Fluids and Lubricants".**

CAUTION:
- **The refill capacity depends on the engine oil temperature and drain time. Use these specifications for reference only.**
- **Always use oil level gauge to determine the proper amount of engine oil in the engine.**

3. Warm up engine and check area around drain plug and oil filter for engine oil leaks. Repair as necessary.
4. Stop engine and wait for 10 minutes.
5. Check the engine oil level. Refer to MA-20, "ENGINE OIL : Inspection".

OIL FILTER

OIL FILTER : Removal and Installation

INFOID:0000000009681915

REMOVAL

1. Drain engine oil. Refer to MA-21, "ENGINE OIL : Draining".
2. Remove oil filter using suitable tool (A).
   ⇦: Front

   WARNING:
   Be careful not to get burned; engine and engine oil may be hot.

   CAUTION:
   - **When removing, prepare a shop cloth to absorb engine oil leaks and spills.**
   - **Do not spill engine oil on drive belt.**
   - **Completely wipe off any engine oil that spills on engine and vehicle.**
   - **Oil filter is provided with relief valve. Use Genuine NISSAN oil filter or equivalent.**

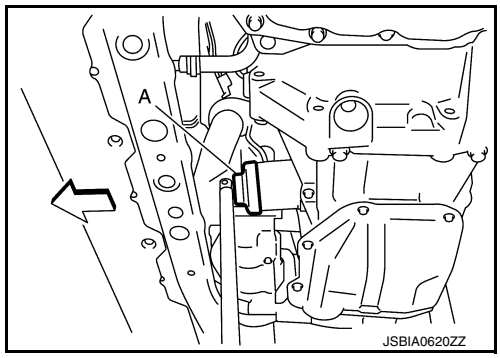

INSTALLATION

1. Remove foreign materials adhering to the oil filter installation surface.
2. Apply new engine oil to the oil seal contact surface of new oil filter.

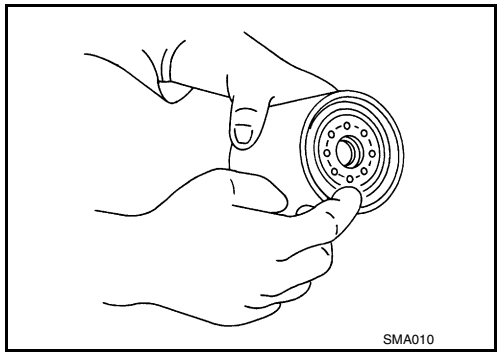

3. Screw oil filter manually until it touches the installation surface, then tighten it by 2/3 turn (A), or tighten to specification.

   Oil filter : **17.7 N·m (1.8 kg-m, 13 ft-lb)**

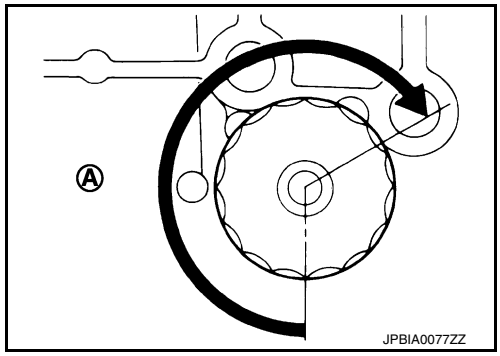

4. Refill engine with new engine oil. Refer to MA-21, "ENGINE OIL : Refilling".

SPARK PLUG

SPARK PLUG : Exploded View

INFOID:0000000009681916

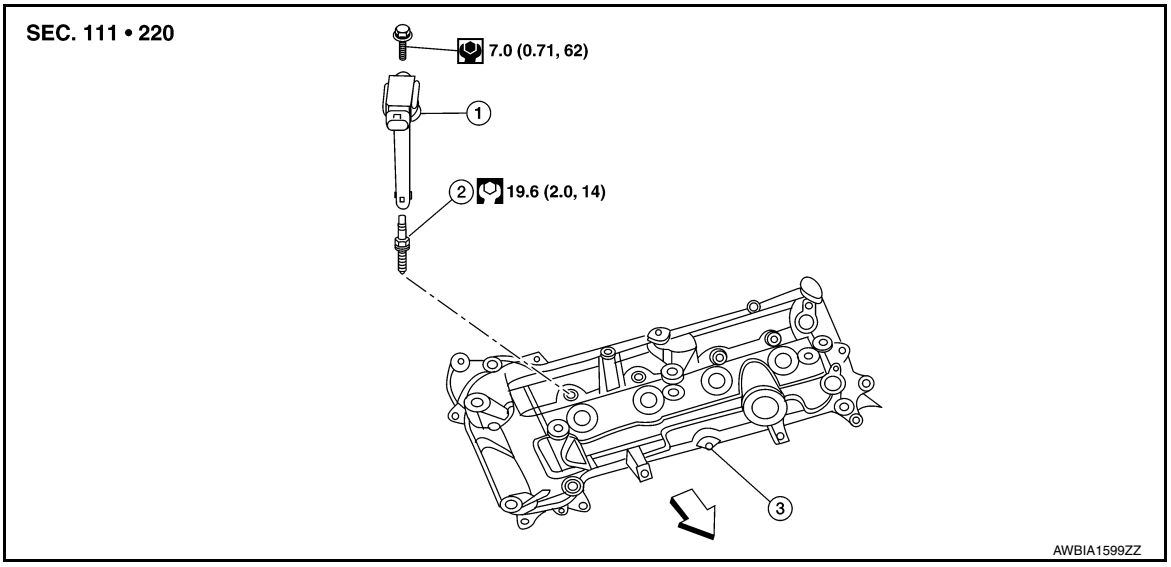

1. Ignition coil
2. Spark plug
3. Rocker cover

⇦ Front

SPARK PLUG : Removal and Installation

INFOID:0000000009681917

REMOVAL

1. Remove ignition coil. Refer to EM-48, "Removal and Installation".
   CAUTION:
   Do not drop or shock ignition coil.
2. Remove spark plug using a suitable tool.

   Diameter (a) : 14 mm (0.55 in)

   CAUTION:
   Do not drop or shock spark plug.

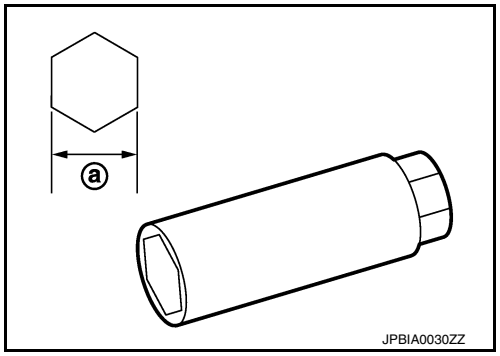

INSPECTION AFTER REMOVAL

- If the spark plug tip is covered with carbon, a spark plug cleaner may be used.

Cleaner air pressure : Less than 588 kPa (6 kg/cm^2, 85 psi)

Cleaning time : Less than 20 seconds

CAUTION:

Do not use a wire brush for cleaning.

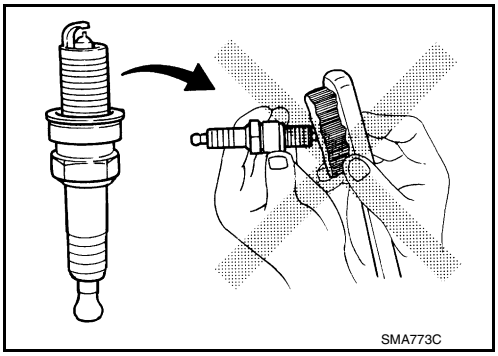

- Checking and adjusting spark plug gap is not required between change intervals. Do not adjust the gap; replace the spark plug as necessary if out of specification.

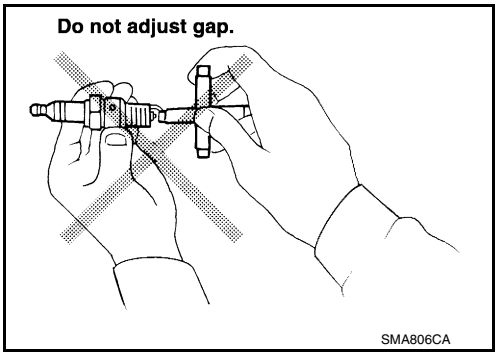

INSTALLATION

Installation is in the reverse order of removal.

CAUTION:

Do not drop or shock the spark plug.

Make	NGK
Standard type*	PLZKAR6A-11
Gap (nominal)	1.1 mm (0.043 in)

*: Always check with the Parts Department for the latest parts information.

CAUTION:

Always tighten the spark plug to specified torque to align the orientation of electrodes. The ground electrode of a genuine spark plug is positioned in the area of maximum ignitability by tightening to the specified torque. When replacing spark plugs, use genuine spark plugs of which the ground electrode is adjusted.

NOTE:

The ground electrode of the spark plug is positioned in the area of maximum ignitability to improve combustion eficiency in the cylinder, reduce CO2 (carbon dioxide) emission and improve fuel economy.

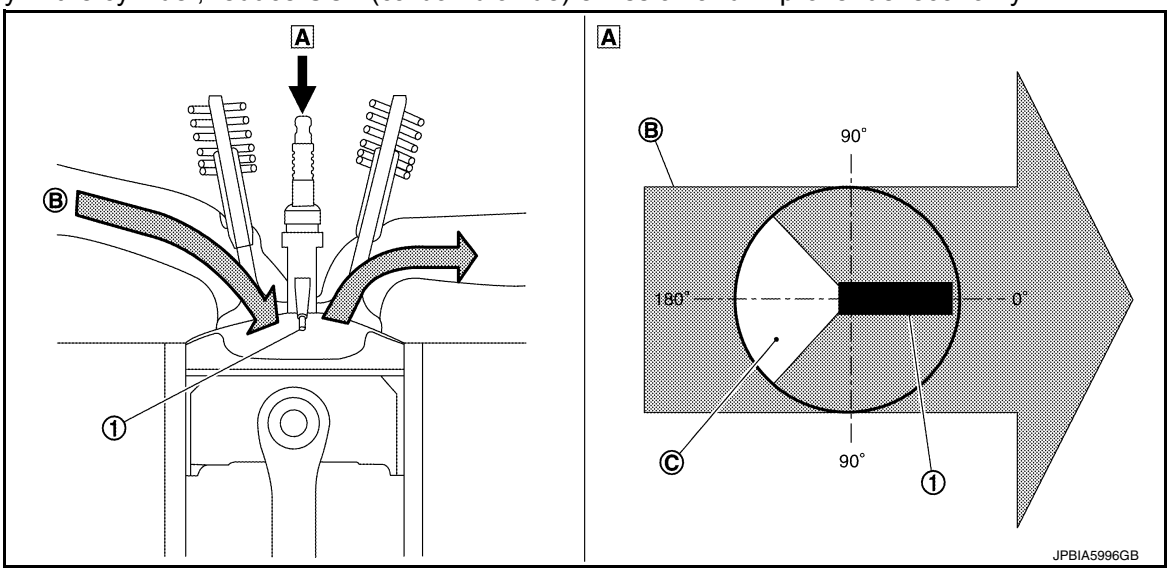

1. Ground electrode of spark plug
A. Top view
B. Air-fuel mixture flow
C. Poor ignitability region

EVAP VAPOR LINES

EVAP VAPOR LINES : Inspection

INFOID:0000000009417519

1. Visually inspect EVAP vapor lines for improper attachment and for cracks, damage, loose connections, chafing and deterioration.
2. Inspect fuel tank filler cap vacuum relief valve for clogging, sticking, etc. Refer to EC-461, "Inspection".

CHASSIS AND BODY MAINTENANCE

EXHAUST SYSTEM

EXHAUST SYSTEM : Inspection

INFOID:0000000009681958

Check exhaust pipes, muffler, and mounting for improper attachment, leaks, cracks, damage or deterioration.
- If anything is found, repair or replace damaged parts.

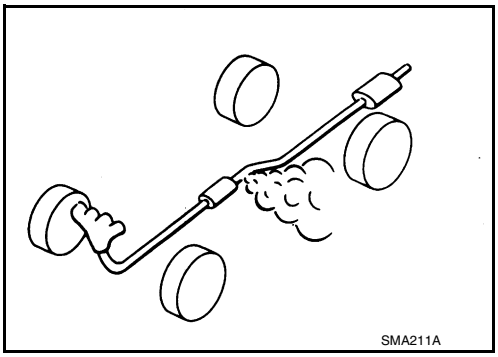

CVT FLUID

CVT FLUID : Inspection

INFOID:0000000009681963

FLUID LEAKAGE
- Check transaxle surrounding area (oil seal and plug etc.)for fluid leakage.
- If anything is found, repair or replace damaged parts and adjust CVT fluid level. Refer to MA-28, "CVT FLUID : Adjustment".

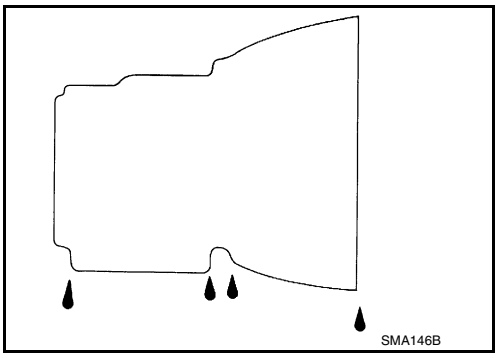

CVT FLUID : Replacement

INFOID:0000000009681964

CVT fluid	**: Refer to TM-256, "General Specification".**
Fluid capacity	**: Refer to TM-256, "General Specification".**

CAUTION:
- **Use only Genuine NISSAN CVT Fluid NS-3. Using transmission fluid other than Genuine NISSAN CVT Fluid NS-3 will damage the CVT, which is not covered by the (NISSAN new vehicle limited) warranty.**
- **Always use shop paper. Never use shop cloth.**
- **Replace a drain plug gasket with new ones at the final stage of the operation when installing.**
- **Use caution when looking into the drain hole as there is a risk of dripping fluid entering the eye.**
- **After replacement, always perform CVT fluid leakage check.**

1. Select “Data Monitor” in “TRANSMISSION” using CONSULT.
2. Select “FLUID TEMP” and confirm that the CVT fluid temperature is 40°C (104°F) or less.
3. Check that the selector lever is in the “P” position, then completely engage the parking brake.
4. Lift up the vehicle.
5. Remove the drain plug and overflow tube and drain the CVT fluid from the oil pan. TM-240, "Removal and Installation".

6. Install the charging pipe set (KV311039S0) (A) into the drain hole.
   CAUTION:
   Tighten the charging pipe by hand.
7. Install the ATF changer hose (B) to the charging pipe.
   CAUTION:
   Press the ATF changer hose all the way onto the charging pipe until it stops.
8. Fill approximately 3 liter (2-5/8 Imp qt) of the CVT fluid.
9. Remove the ATF changer hose and charging pipe, then install the drain plug.
   NOTE:
   Perform this work quickly because CVT fluid leaks.

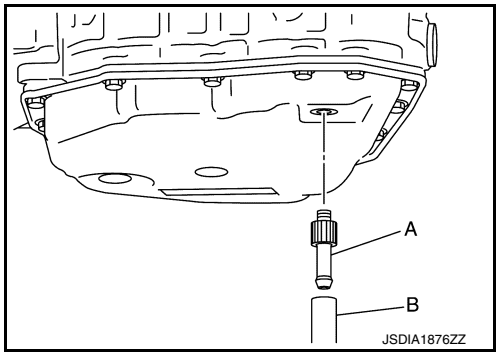

10. Lift down the vehicle.
11. Start the engine.
12. While depressing the brake pedal, shift the selector lever to the entire position from “P” to “L”, and shift it to the “P” position.
    NOTE:
    Hold the lever at each position for 5 seconds.
13. Check that the CONSULT “Data monitor” in “FLUID TEMP” is 35°C (95°F) to 45°C (113°F).
14. Stop the engine.
15. Lift up the vehicle.
16. Remove the drain plug, and then drain CVT fluid from oil pan.
17. Repeat steps 6 to 16 (one time).
18. Install the overflow tube. Refer to TM-240, "Removal and Installation".
    CAUTION:
    Be sure to tighten to the specified torque. If it is not tightened to the specified torque, the tube may be damaged.
19. Install the charging pipe set (KV311039S0) (A) into the drain hole.
    CAUTION:
    Tighten the charging pipe by hand.
20. Install the ATF changer hose (B) to the charging pipe.
    CAUTION:
    Press the ATF changer hose all the way onto the charging pipe until it stops.
21. Fill approximately 3 liter (2-5/8 Imp qt) of the CVT fluid.
22. Remove the ATF changer hose and charging pipe, then install the drain plug.
    NOTE:
    Perform this work quickly because CVT fluid leaks.

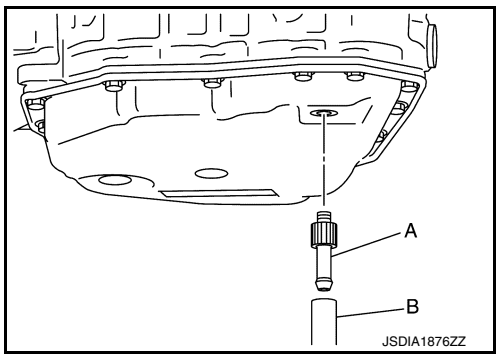

23. Lift down the vehicle.
24. Start the engine.
25. While depressing the brake pedal, shift the selector lever to the entire position from “P” to “L”, and shift it to the “P” position.
    NOTE:
    Hold the lever at each position for 5 seconds.
26. Check that the CONSULT “Data monitor” in “FLUID TEMP” is 35°C (95°F) to 45°C (113°F).
27. Lift up the vehicle.
28. Remove the drain plug and confirm that the CVT fluid is drained from the overflow tube.
    CAUTION:
    Perform this work with the vehicle idling.
    NOTE:
    If the CVT fluid is not drained, refer to “Adjustment” and refill with the CVT fluid.

29. When the flow of CVT fluid slows to a drip, tighten the drain plug to the specified torque. TM-240, "Removal and Installation".
    CAUTION:
    Never reuse drain plug gasket.
30. Lift down the vehicle.
31. Select “Work Support” in “TRANSMISSION” using CONSULT.
32. Select “CONFORM CVTF DETERIORTN”.
33. Select “Erase”.
34. Stop the engine.

CVT FLUID : Adjustment

INFOID:0000000009681965

CVT fluid	**: Refer to TM-256, "General Specification".**
Fluid capacity	**: Refer to TM-256, "General Specification".**

CAUTION:
- **Use only Genuine NISSAN CVT Fluid NS-3. Using transmission fluid other than Genuine NISSAN CVT Fluid NS-3 will damage the CVT, which is not covered by the (NISSAN new vehicle limited) warranty.**
- **During adjustment of the CVT fluid level, check CONSULT so that the oil temperature may be maintained from 35 to 45°C (95 to 113°F).**
- **Use caution when looking into the drain hole as there is a risk of dripping fluid entering the eye.**

1. Check that the selector lever is in the “P” position, then completely engage the parking brake.
2. Start the engine.
3. Adjust the CVT fluid temperature to be approximately 40°C (104°F).
   NOTE:
   The CVT fluid is largely affected by temperature. Therefore be sure to use CONSULT and check the “FLUID TEMP” under “TRANSMISSION” in “Data Monitor” while adjusting.
4. While depressing the brake pedal, shift the selector lever to the entire position from “P” to “L”, and shift it to the “P” position.
   NOTE:
   Hold the lever at each position for 5 seconds.
5. Lift up the vehicle.
6. Check that there is no CVT fluid leakage.
7. Remove the drain plug. Refer to TM-240, "Removal and Installation".
8. Install the charging pipe set (KV311039S0) (A) into the drain plug hole.
   CAUTION:
   Tighten the charging pipe by hand.
9. Install the ATF changer hose (B) to the charging pipe.
   CAUTION:
   Press the ATF changer hose all the way onto the charging pipe until it stops.
10. Fill approximately 0.5 liter (1/2 Imp qt) of the CVT fluid.
11. Remove the ATF changer hose from the charging pipe, and check that the CVT fluid drains out from the charging pipe. If it does not drain out, perform charging again.
    CAUTION:
    Perform this work with the vehicle idling.

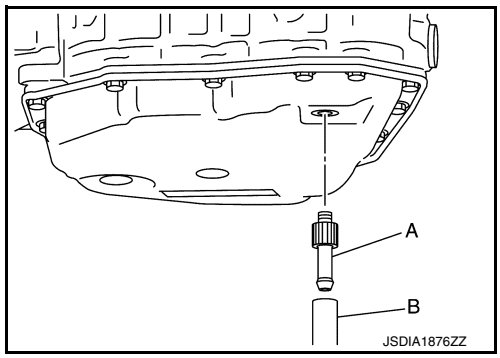

12. When the flow of CVT fluid slows to a drip, remove the charging pipe from the oil pan.
13. Tighten the drain plug to the specified torque. Refer to TM-240, "Removal and Installation".
    CAUTION:
    Never reuse drain plug gasket.
14. Lift down the vehicle.
15. Stop the engine.

CLUTCH FLUID

CLUTCH FLUID : Inspection

INFOID:0000000009417527

FLUID LEAKAGE

- Check clutch line for cracks, deterioration or other damage. Replace any damaged parts.
- Check for fluid leakage by fully depressing clutch pedal while engine is running.

CAUTION:
If leaks occur around connections, reinstall the lines or replace damaged parts, if necessary.

FLUID LEVEL

- Check that the fluid level in the reservoir tank is within the specified range, between the MAX and MIN lines as shown.
- Visually check for any clutch fluid leaks around the reservoir tank.
- Check the clutch system for any leaks if the fluid level is extremely low (lower than MIN).

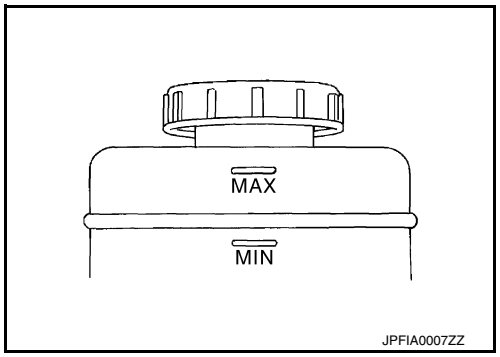

CLUTCH FLUID : Draining

INFOID:0000000009417528

CAUTION:
Do not spill clutch fluid onto painted surfaces. If fluid spills, wipe up immediately and wash the affected area with water.

1. Connect a transparent vinyl hose to air bleeder of bleeding connector (1).

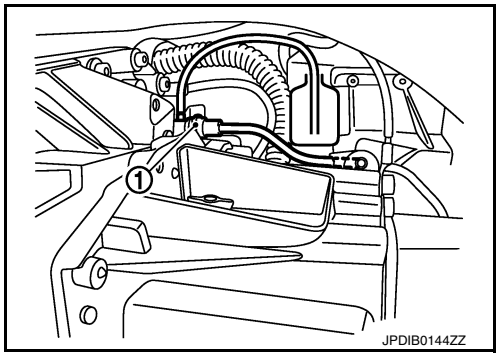

2. Press the lock pin (1) into the bleeding connector (2), and maintain the position.

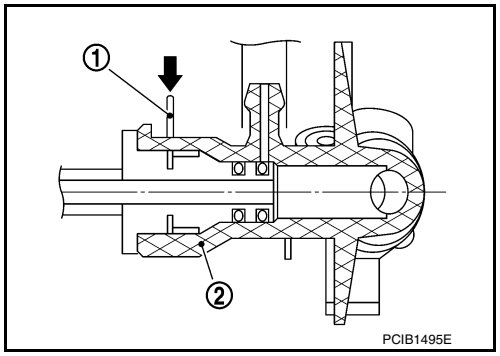

3. Slide clutch tube (1) for the specified distance (A) in the direction of the arrow (⬅) as shown.

   (2) : Bleeding connector

   Dimension (A) : 5 mm (0.20 in)

   CAUTION:
   Do not allow the clutch tube to disconnect from the bleeding connector.

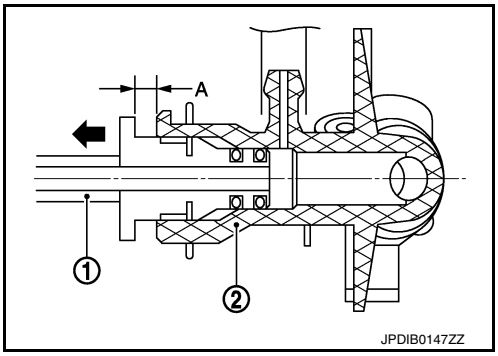

4. Depress clutch pedal to gradually discharge clutch fluid.
   CAUTION:
   Clutch tube is under hydraulic pressure; do not allow the clutch tube to disconnect from the bleeding connector.

CLUTCH FLUID : Refilling

INFOID:0000000009417529

CAUTION:
Do not spill clutch fluid onto painted surfaces. If fluid spills, wipe up immediately and wash the affected area with water.

1. Check that there is no foreign material in reservoir tank and then fill with new clutch fluid.
   CAUTION:
   Do not reuse drained clutch fluid.
2. Connect a transparent vinyl hose to air bleeder of bleeding connector (1).

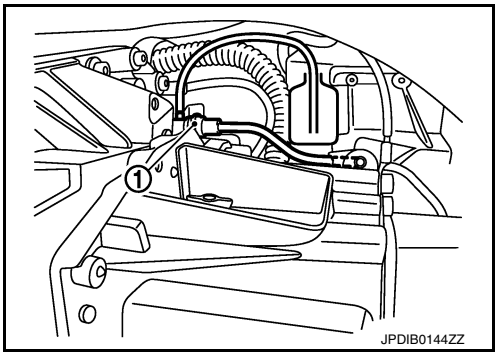

3. Press the lock pin (1) into the bleeding connector (2), and maintain the position.

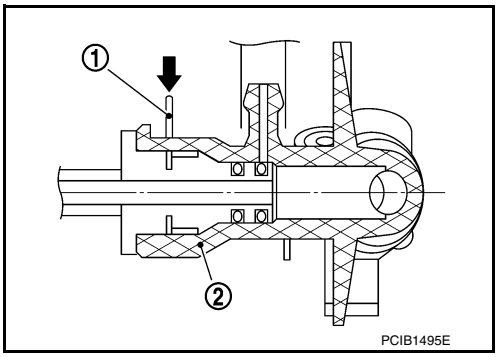

4. Slide clutch tube (1) for the specified distance (A) in the direction of the arrow (⬅) as shown.

   (2) : Bleeding connector

   Dimension (A) : 5 mm (0.20 in)

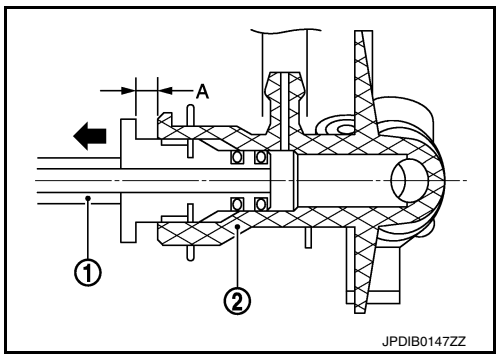

5. Slowly depress clutch pedal to the full stroke position and then release the pedal.
   CAUTION:
   Clutch tube is under hydraulic pressure; do not allow the clutch tube to disconnect from the bleeding connector.
6. Repeat step 5 at intervals of 2 or 3 seconds until new clutch fluid is discharged.
   CAUTION:
   Monitor clutch fluid level in reservoir tank so as not to empty the tank.
7. Return clutch tube and lock pin in their original positions while clutch pedal is depressed.
8. Perform the air bleeding. Refer to CL-8, "Air Bleeding".

GEAR OIL

GEAR OIL : Inspection

INFOID:0000000009681959

GEAR OIL LEAKS

Make sure that gear oil is not leaking from transaxle or around it.

GEAR OIL LEVEL

1. Remove filler plug (1) and gasket from transaxle case.
2. Check the gear oil level from filler plug hole as shown.
   CAUTION:
   Do not start engine while checking gear oil level.
3. Install a new gasket on filler plug and then install filler plug to transaxle case.
   CAUTION:
   Do not reuse gasket.
4. Tighten filler plug to the specified torque. Refer to TM-26, "Exploded View".

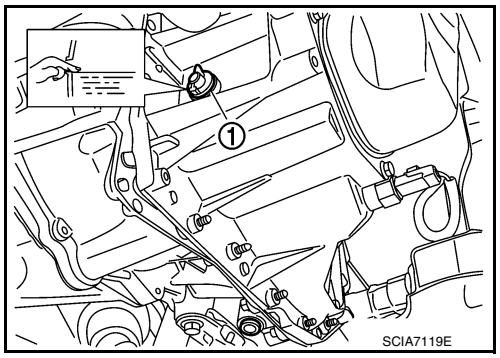

GEAR OIL : Draining

INFOID:0000000009681960

1. Start engine and let it run to warm up transaxle.
2. Stop engine. Remove drain plug (1) and gasket, using suitable tool and then drain gear oil.
3. Install a new gasket on drain plug (1) and install drain plug to clutch housing, using suitable tool.
   CAUTION:
   Do not reuse gasket.
4. Tighten drain plug (1) to the specified torque. Refer to TM-26, "Exploded View".

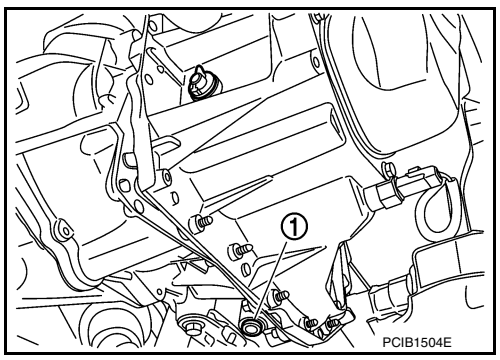

GEAR OIL : Refilling

INFOID:0000000009681961

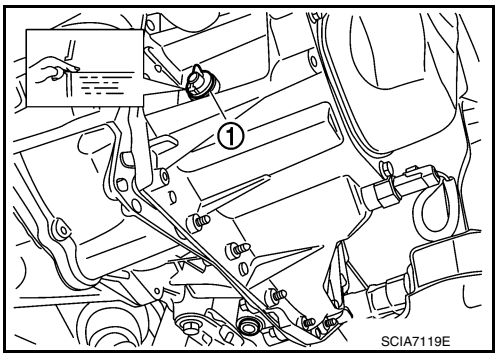

1. Remove filler plug (1) and gasket from transaxle case.
2. Fill with new gear oil until gear oil level reaches the specified limit at filler plug hole as shown.
   CAUTION:
   Do not start engine while checking gear oil level.

   Oil capacity and viscosity : **Refer to MA-11, "Fluids and Lubricants".**

3. Install a new gasket on filler plug and then install filler plug to transaxle case.
   CAUTION:
   Do not reuse gasket.
4. Tighten filler plug to the specified torque. Refer to TM-26, "Exploded View".

WHEELS

WHEELS : Inspection

INFOID:0000000009681967

1. Check tires for wear and improper inflation.
2. Check wheels for deformation, cracks and other damage. If deformed, remove wheel and check wheel runout.

a. Remove tire from wheel and mount wheel on a balancer machine.
b. Set dial indicator as shown.
c. Check runout, if runout value exceeds the limit, replace wheel.

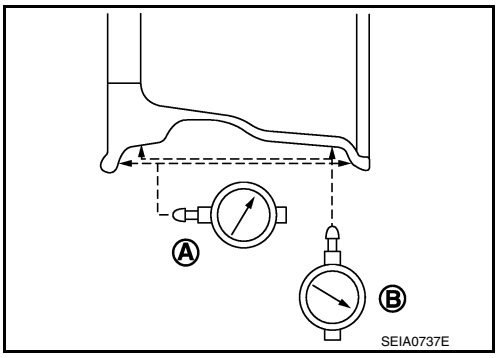

Limit	
Axial Runout (A)	**Refer to WT-50, "Wheel".**
Radial Runout (B)	**Refer to WT-50, "Wheel".**

WHEELS : Adjustment

INFOID:0000000009681968

BALANCING WHEELS (ADHESIVE WEIGHT TYPE)

Preparation Before Adjustment

Remove inner and outer balance weights from the wheel and tire. Using releasing agent, remove double-faced adhesive tape from the wheel and tire.

CAUTION:
- **Be careful not to scratch the wheel and tire during removal.**
- **After removing double-faced adhesive tape, wipe clean all traces of releasing agent from the wheel and tire.**

Wheel Balance Adjustment

CAUTION:
- **DO NOT use center hole cone-type clamping machines to hold the wheel during tire removal/installation or balancing or damage to the wheel paint, cladding or chrome may result. Use only rim-type or universal lug-type clamping machines to hold the wheel during servicing.**
- If a balancer machine has an adhesive weight mode setting, select the adhesive weight mode setting and skip Step 2 below. If a balancer machine only has the clip-on (rim flange) weight mode setting, follow Step 2 to calculate the correct size adhesive weight.

1. Set wheel and tire on balancer machine using the center hole as a guide. Start the balancer machine.

2. For balancer machines that only have a clip-on (rim flange) weight mode setting, follow this step to calculate the correct size adhesive weight to use. When inner and outer imbalance values are shown on the balancer machine indicator, multiply outer imbalance value by 5/3 (1.67) to determine balance weight that should be used. Select the outer balance weight with a value closest to the calculated value above and install in to the designated outer position of or at the designated angle in relation to the wheel and tire.

a. Indicated imbalance value × 5/3 (1.67) = balance weight to be installed
Calculation example:
23 g (0.81 oz) × 5/3 (1.67) = 38.33 g (1.35 oz) ⇒ 40 g (1.41 oz) balance weight (closer to calculated balance weight value)
NOTE:
Note that balance weight value must be closer to the calculated balance weight value.
Example:
37.4 ⇒ 35 g (1.23 oz)
37.5 ⇒ 40 g (1.41 oz)

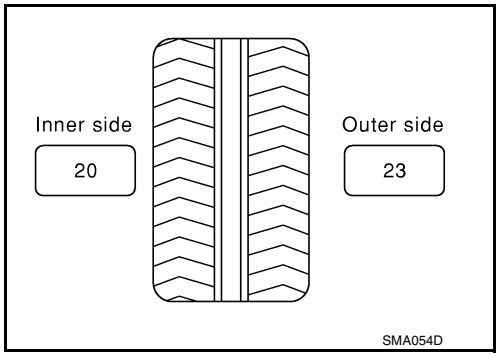

3. Install balance weight in the position shown.
CAUTION:
- **Do not install the inner balance weight before installing the outer balance weight.**
- **Before installing the balance weight, be sure to clean the mating surface of the wheel and tire.**
- When installing balance weight (1) to wheel and tire, set it into the grooved area (A) on the inner wall of the wheel and tire as shown so that the balance weight center (B) is aligned with the balancer machine indication position (angle) (C).
CAUTION:
- **Always use Genuine NISSAN adhesive balance weights.**
- **Balance weights are non-reusable; always replace with new ones.**
- **Do not install more than three sheets of balance weights.**

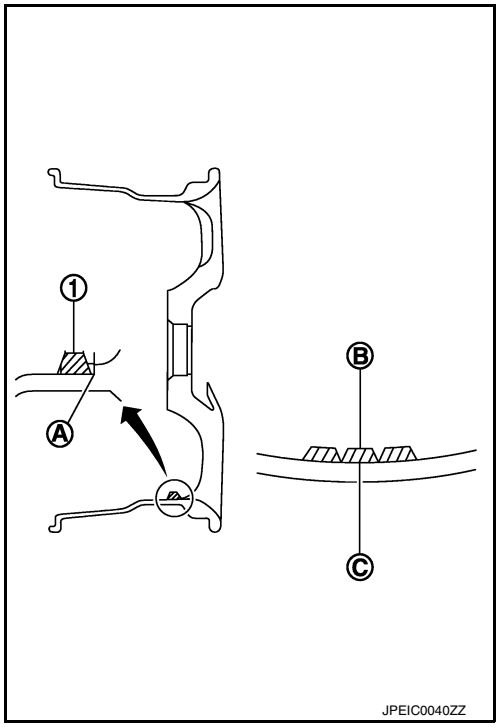

4. If calculated balance weight value exceeds 50 g (1.76 oz), install two balance weight sheets in line with each other as shown.
CAUTION:
Do not install one balance weight sheet on top of another.
5. Start balancer machine again.
6. Install balance weight on inner side of wheel and tire in the balancer machine indication position (angle).
CAUTION:
Do not install more than two balance weights.
7. Start balancer machine. Make sure that inner and outer residual imbalance values are 5 g (0.17 oz) each or below.

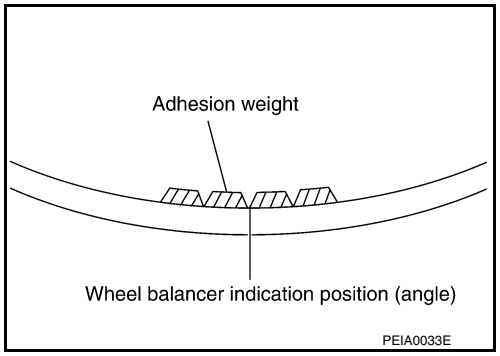

8. If either residual imbalance value exceeds 5 g (0.17 oz), repeat installation procedures.

Wheel balance	Dynamic (At flange)	Static (At flange)
Maximum allowable imbalance	Refer to WT-50, "Wheel".	

TIRE ROTATION

- Follow the maintenance schedule for tire rotation service intervals. Refer to MA-7, "Introduction of Periodic Maintenance".
- Rotate the wheel and tires front to back in the pattern as shown.
- When installing the wheel, tighten wheel nuts to the specified torque.

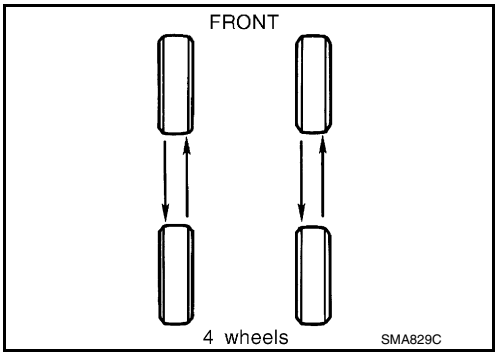

WARNING:

- **After rotating the tires, check and adjust the tire pressure.**
- **Retighten the wheel nuts when the vehicle has been driven for 1,000 km (600 mi) (also in case of a flat tire, etc.).**
- **Do not include the spare tire when rotating the tires.**

CAUTION:

- **When installing wheels, tighten them diagonally by dividing the work two to three times in order to prevent the wheels from developing any distortion.**
- **Be careful not to tighten the wheel nuts to a torque exceeding specification to prevent strain on the disc rotor.**
- **Use Genuine NISSAN wheel nuts.**

Wheel nut tightening torque : **WT-45, "Exploded View"**

- Perform the ID registration after tire rotation. Refer to WT-22, "Work Procedure".

BRAKE FLUID LEVEL AND LEAKS

BRAKE FLUID LEVEL AND LEAKS : Inspection

INFOID:0000000009417535

BRAKE FLUID LEVEL

- Check that the fluid level in the reservoir tank is within the specified range between the MAX – MIN lines as shown.
- Visually check for any brake fluid leakage around the reservoir tank.
- Check the brake system for any leakage if the fluid level is extremely low (lower than MIN).
- Check the brake system for fluid leakage if the warning lamp remains illuminated even after the parking brake is released.
- Check the reservoir tank for foreign matter (e.g., dust) and oils other than brake fluid.

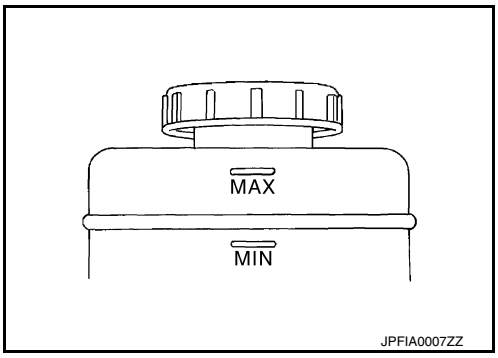

BRAKE LINES AND CABLES

BRAKE LINES AND CABLES : Inspection

INFOID:0000000009417536

BRAKE LINES

1. Check brake lines (pipes and hoses) for cracks, deterioration or other damage. Replace any damaged parts.
2. Check for brake fluid leaks by fully depressing brake pedal while engine is running.
   CAUTION:
   Retighten the applicable connection to the specified torque and repair any abnormal (damaged, worn or deformed) part if any brake fluid leaks are present.

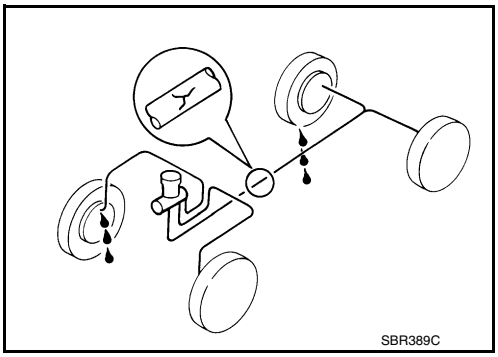

PARKING BRAKE CABLES

Check parking brake cables for improper attachment, leaks, chafing, abrasions, deterioration, etc.

BRAKE FLUID

BRAKE FLUID : Inspection

INFOID:0000000009681969

BRAKE FLUID LEVEL

- Check that the fluid level in the reservoir tank is within the specified range between the MAX – MIN lines as shown.
- Visually check for any brake fluid leaks around the reservoir tank.
- Check the brake system for any leaks if the fluid level is extremely low (lower than MIN).
- Check the brake system for fluid leaks if the warning lamp remains illuminated even after the parking brake is released.
- Check the reservoir tank for the mixing of foreign matter (e.g. dust) and oils other than brake fluid.

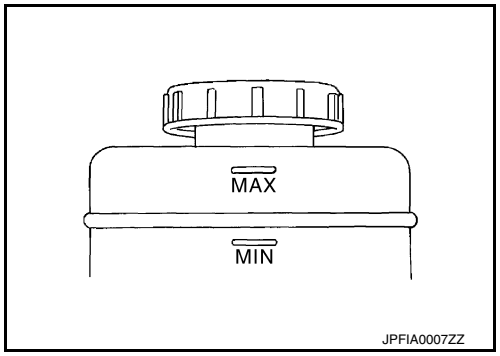

BRAKE LINE

1. Check brake tubes and hoses for cracks, deterioration or other damage. Replace any damaged parts.
2. Check for brake fluid leaks by fully depressing brake pedal while engine is running.
   CAUTION:
   Retighten the applicable connection to the specified torque and repair any abnormal (damaged, worn or deformed) part if any brake fluid leaks are present.

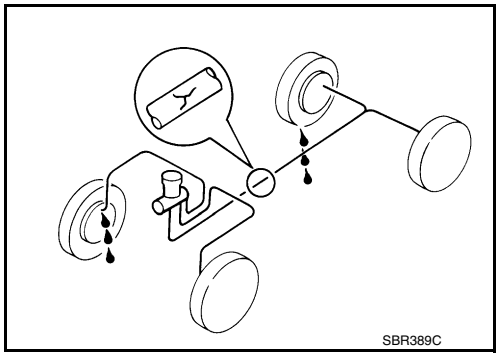

BRAKE FLUID : Draining

INFOID:0000000009681970

CAUTION:
- **Do not spill or splash brake fluid on painted surfaces. Brake fluid may seriously damage paint. Wipe it off immediately and wash with water if it gets on a painted surface.**
- **Turn the ignition switch OFF and disconnect ABS actuator and electric unit (control unit) or battery negative terminal before performing work.**

1. Connect a vinyl tube to the bleeder valve.
2. Depress the brake pedal and loosen the bleeder valve to gradually discharge brake fluid.

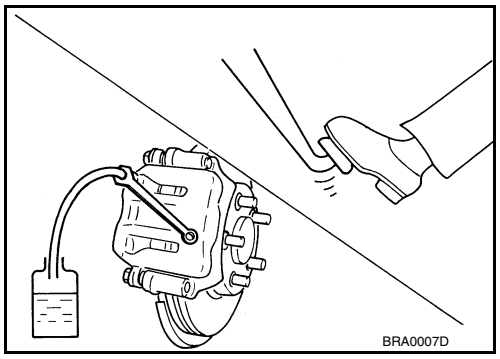

BRAKE FLUID : Refilling

INFOID:0000000009681971

CAUTION:
- **Turn the ignition switch OFF and disconnect ABS actuator and electric unit (control unit) or battery negative terminal before performing work.**
- **Do not spill or splash brake fluid on painted surfaces. Brake fluid may seriously damage paint. Wipe it off immediately and wash with water if it gets on a painted surface.**
- **Monitor the brake fluid level in the reservoir while performing the air bleeding procedure.**
- **Always use new brake fluid for refilling. Do not reuse drained brake fluid.**
- **Do not allow foreign matter (e.g. dust) and oils other than brake fluid to enter the reservoir tank.**

1. Check that there is no foreign material in the reservoir tank, and refill with new brake fluid. Refer to MA-11, "Fluids and Lubricants".
2. Loosen the bleeder valve, slowly depress the brake pedal to the full stroke, and then release the pedal. Repeat this operation at intervals of 2 or 3 seconds until new brake fluid is discharged. Then close the bleeder valve with the brake pedal depressed. Repeat the same work on each wheel.
3. Perform the air bleeding procedure. Refer to MA-36, "BRAKE FLUID : Bleeding Brake System".

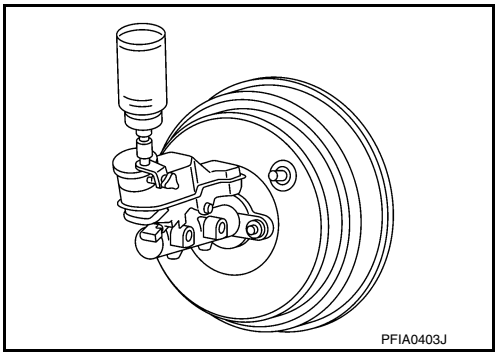

BRAKE FLUID : Bleeding Brake System

INFOID:0000000009681972

CAUTION:
- **Turn the ignition switch OFF and disconnect ABS actuator and electric unit (control unit) or battery negative terminal before performing the work.**
- **Monitor the fluid level in the reservoir tank while performing the air bleeding.**
- **Do not spill or splash brake fluid on painted surfaces. Brake fluid may seriously damage paint. Wipe it off immediately and wash with water if it gets on a painted surface.**
- **Always use new brake fluid for refilling. Do not reuse drained brake fluid.**
- **Do not allow foreign matter (e.g. dust) and oils other than brake fluid to enter the reservoir tank.**

1. Connect a vinyl tube to the bleeder valve.
2. Fully depress the brake pedal 4 to 5 times.
3. Loosen the bleeder valve and bleed air with the brake pedal depressed, and then quickly tighten the bleeder valve.
4. Repeat steps 2 and 3 until all of the air is out of the brake line.
5. Tighten the bleeder valve to the specified torque.
   - Front disc brake: Refer to BR-35, "BRAKE CALIPER ASSEMBLY : Exploded View".
   - Rear drum brake: Refer to BR-40, "Exploded View".
6. Perform steps 1 to 5 in the following order: Front (RH) brake → front (LH) brake → rear (RH) brake → rear (LH) brake.
7. Check that the fluid level in the reservoir tank is within the specified range after air bleeding. Refer to MA-35, "BRAKE FLUID : Inspection".
8. Add brake fluid as necessary to keep the brake fluid level within the specified range. Refer to MA-11, "Fluids and Lubricants".
9. Inspect the brake pedal height and play. Adjust it if the measurement value is not the standard. Refer to BR-8, "Inspection and Adjustment".

DISC BRAKE

DISC BRAKE : Inspection

INFOID:0000000009681973

INSPECTION

Check brake pad wear thickness from an inspection hole on cylinder body. Check using a scale if necessary.

Wear thickness : Refer to BR-44, "Front Disc Brake".

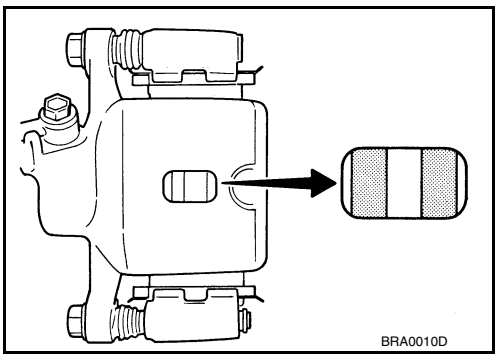

DISC BRAKE : Brake Burnishing

INFOID:0000000009681974

BRAKE BURNISHING

Burnish contact surfaces between disc brake rotor and brake pads according to the following procedure after refinishing disc brake rotors, replacing disc brake rotors, replacing brake pads, or if a soft pedal occurs at very low mileage:

CAUTION:

- **Be careful of vehicle speed because the brake pedal does not operate firmly/securely until pads and disc brake rotor are securely seated.**
- **Only perform this procedure under safe road and traffic conditions. Use extreme caution.**

1. Drive vehicle on straight, flat road.
2. Depress brake pedal with the power to stop vehicle within 3 to 5 seconds until the vehicle stops.
3. Drive without depressing brake pedal for a few minutes to cool the brakes.
4. Repeat steps 1 to 3 until pad and disc brake rotor are securely seated.

DISC BRAKE : Inspection

INFOID:0000000009681975

INSPECTION

Appearance

Check surface of disc brake rotor for uneven wear, cracks, and serious damage. Replace it if necessary. Refer to BR-44, "Front Disc Brake".

Runout

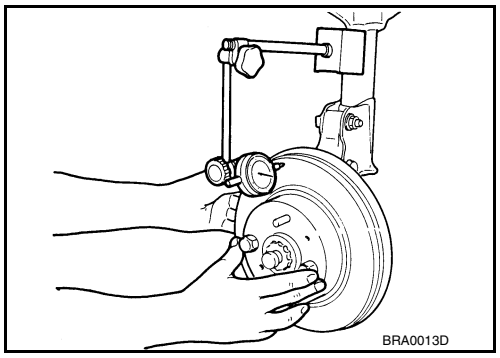

1. Secure the disc brake rotor to the wheel hub with wheel nuts (2 points at least).
2. Check the wheel bearing axial end play before the inspection. Refer to FAX-7, "Inspection".
3. Inspect the runout with a dial indicator to measure at 10 mm (0.39 in) inside the disc edge.

   Runout : Refer to BR-44, "Front Disc Brake".

4. Find the installation position that has a minimum runout by shifting the disc brake rotor-to-wheel hub installation position by one hole at a time if the runout exceeds the limit value.
5. Refinish or replace the disc brake rotor if the runout is outside the limit even after performing the above operation.

   CAUTION:

   If the thickness is less than wear thickness + 0.3 mm (0.012 in), replace the disc brake rotor. Refer to BR-36, "BRAKE CALIPER ASSEMBLY : Removal and Installation".

   Wear thickness : Refer to BR-44, "Front Disc Brake".

Thickness

Check the thickness of the disc brake rotor using a micrometer. Replace the disc brake rotor if the thickness is below the wear limit. Refer to BR-44, "Front Disc Brake".

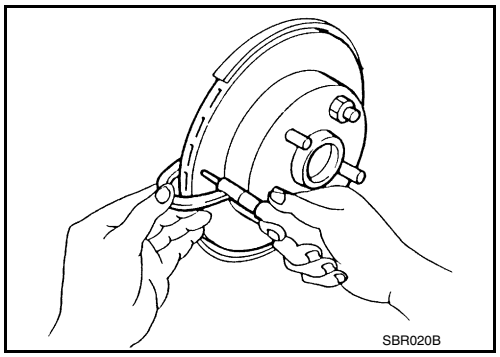

Wear thickness	**: Refer to BR-44, "Front Disc Brake".**
Thickness variation (measured at 8 positions)	**: Refer to BR-44, "Front Disc Brake".**

DRUM BRAKE

DRUM BRAKE : Inspection

INFOID:0000000009681976

INSPECTION

Brake Lining

1. Remove plug from back plate. Refer to BR-40, "Exploded View".
2. Check brake lining wear thickness (A) from an inspection hole on back plate. Check using a scale if necessary.

Wear thickness : Refer to BR-45, "Rear Drum Brake".

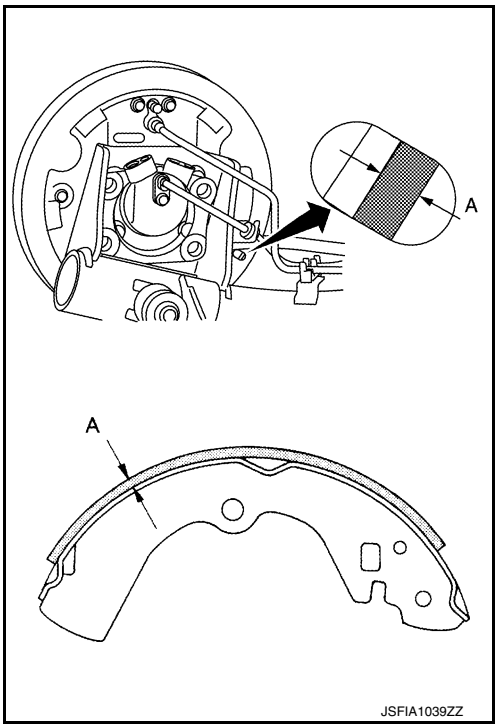

DRUM BRAKE : Brake Burnishing

INFOID:0000000009681977

BRAKE BURNISHING

Burnish contact surfaces between brake lining and brake drum according to the following procedure after refinishing brake drum, replacing brake drum, replacing brake lining, or if a soft pedal occurs at very low mileage:

CAUTION:

- **Be careful of vehicle speed because the brake pedal does not operate firmly/securely until brake lining and brake drum are securely seated.**
- **Only perform this procedure under safe road and traffic conditions. Use extreme caution.**

1. Drive vehicle on straight, flat road.
2. Depress brake pedal with the power to stop vehicle within 3 to 5 seconds until the vehicle stops.
3. Drive without depressing brake pedal for a few minutes to cool the brake.
4. Repeat steps 1 to 3 until brake lining and brake drum are securely seated.

DRUM BRAKE : Inspection

INFOID:0000000009681978

INSPECTION

Appearance

Check surface of brake drum for uneven wear, cracks and serious damage. Replace it if necessary. Refer to RAX-6, "Removal and Installation".

NOTE:

- Make sure the parking brake control is fully released prior to removal of the brake drum.
- The rear wheel hub is part of the brake drum.

Brake Drum Inner Diameter

Check inner diameter (B) of the brake drum.

Inner diameter : Refer to BR-45, "Rear Drum Brake".

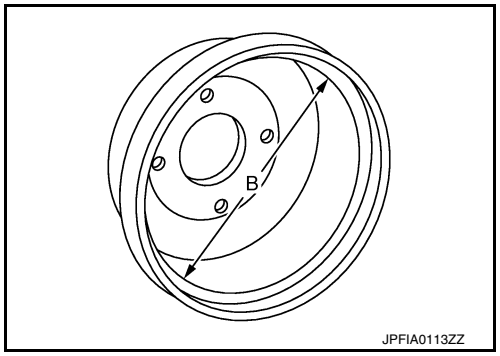

STEERING GEAR AND LINKAGE

STEERING GEAR AND LINKAGE : Inspection

INFOID:0000000009417542

STEERING GEAR

- Check gear housing and boots for looseness, damage and grease leakage.
- Check connection with steering column for looseness.

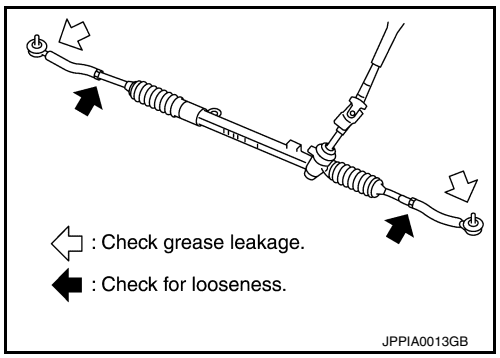

STEERING LINKAGE

Check ball joint, dust cover and other component parts for looseness, wear, damage and grease leakage.

AXLE AND SUSPENSION PARTS

AXLE AND SUSPENSION PARTS : Inspection

INFOID:0000000009417543

Check front and rear axle and suspension parts for excessive play, cracks, wear or other damage.

- Shake each wheel to check for excessive play.
- Check wheel bearings for smooth operation.
- Check axle and suspension nuts and bolts for looseness.
- Check strut (shock absorber) for oil leakage or other damage.
- Check suspension ball joint for grease leakage and ball joint dust cover for cracks or other damage.

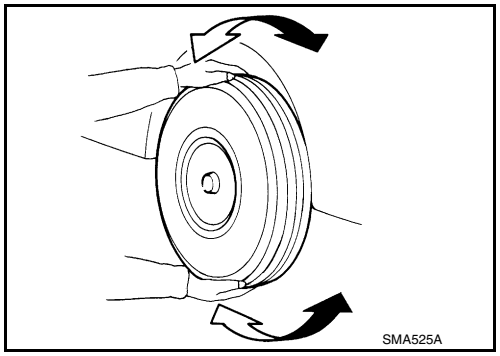

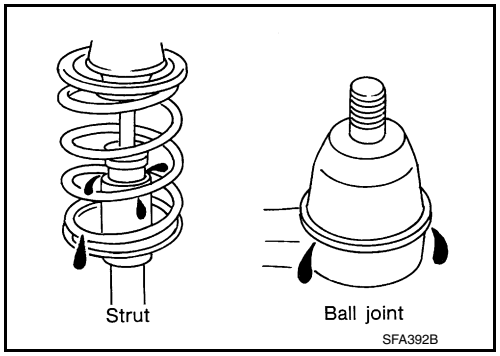

DRIVE SHAFT

DRIVE SHAFT : Inspection

INFOID:0000000009417544

Check boot and drive shaft for cracks, wear, damage and grease leakage.

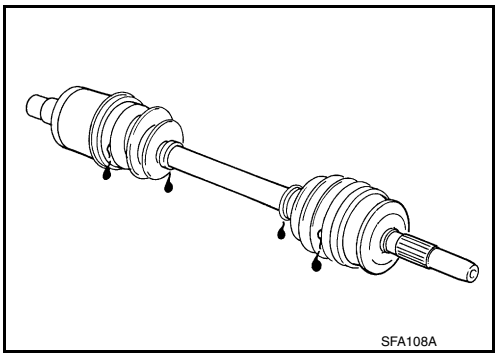

LOCKS, HINGES AND HOOD LATCH

LOCKS, HINGES AND HOOD LATCH : Exploded View

INFOID:0000000009682010

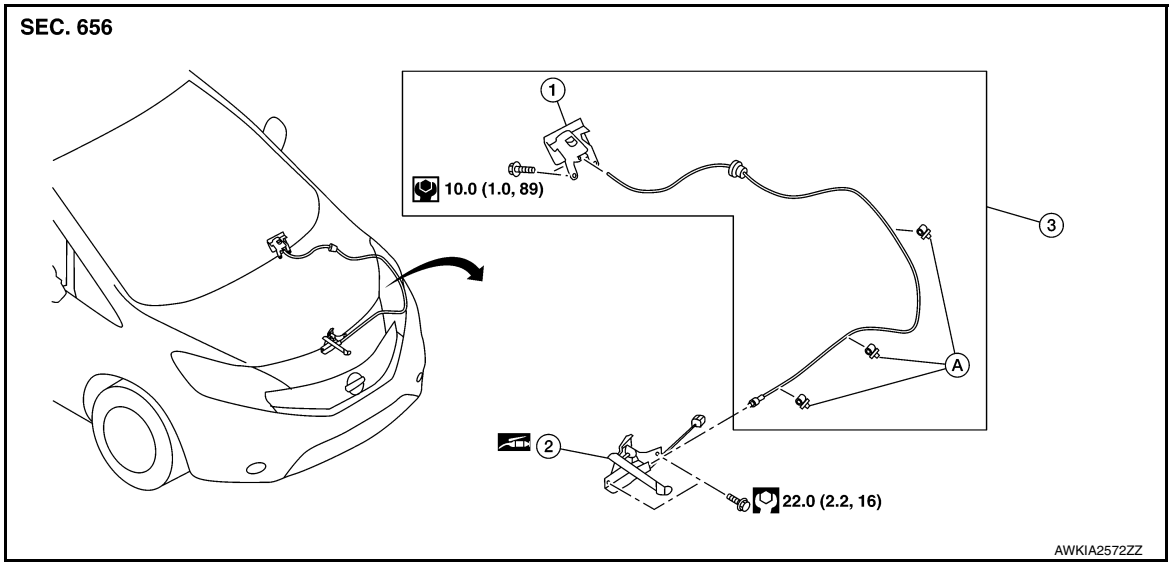

1. Hood lock/fuel filler lid release handle
2. Hood lock assembly
3. Hood lock release cable assembly

A. Clip

LOCKS, HINGES AND HOOD LATCH : Exploded View

INFOID:0000000009681988

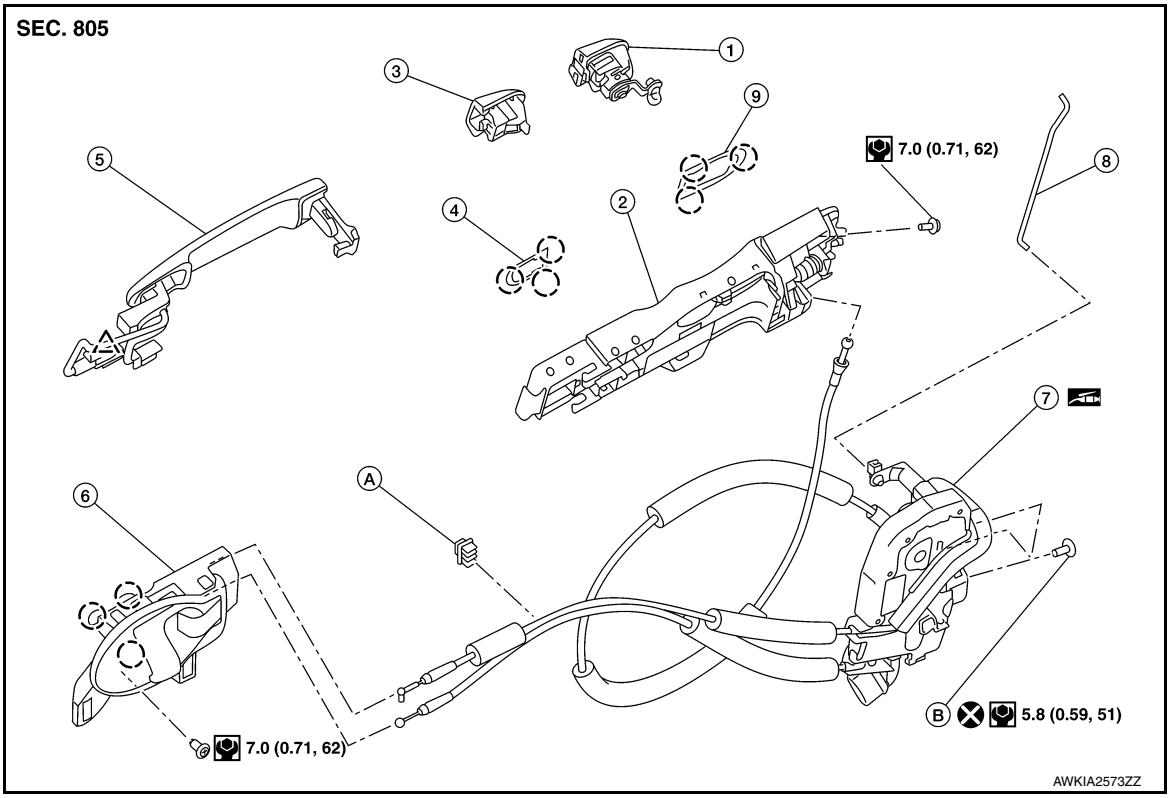

1.	Key cylinder (driver side)	2.	Outside handle bracket	3.	Outside handle escutcheon (passenger side)
4.	Front gasket	5.	Outside handle	6.	Inside handle
7.	Door lock	8.	Key cylinder rod (driver side)	9.	Rear gasket
A.	Clip	B.	Bolt	◌	Pawl

LOCKS, HINGES AND HOOD LATCH : Exploded View

INFOID:0000000009681989

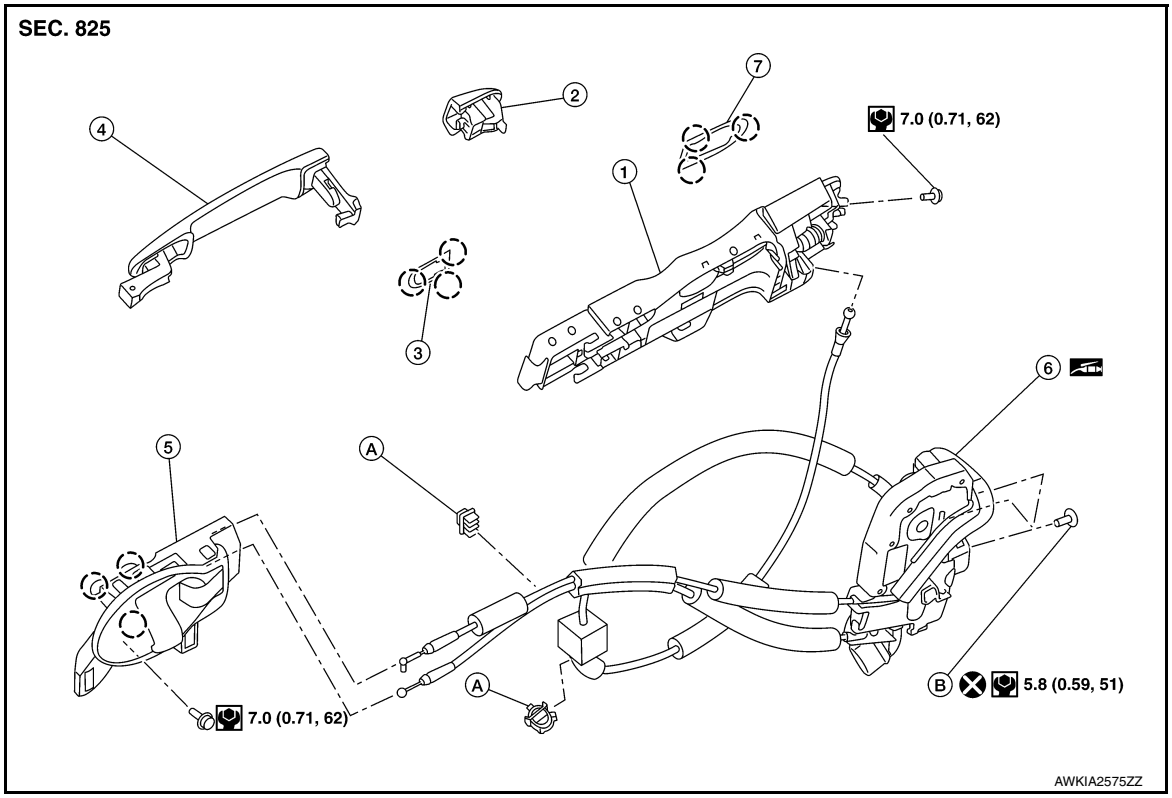

1.	Outside handle bracket	2.	Outside handle escutcheon	3.	Front gasket
4.	Outside handle	5.	Inside handle	6.	Door lock
7.	Door lock	A.	Clip	B.	Bolt
	Pawl				

LOCKS, HINGES AND HOOD LATCH : Exploded View

INFOID:0000000009681990

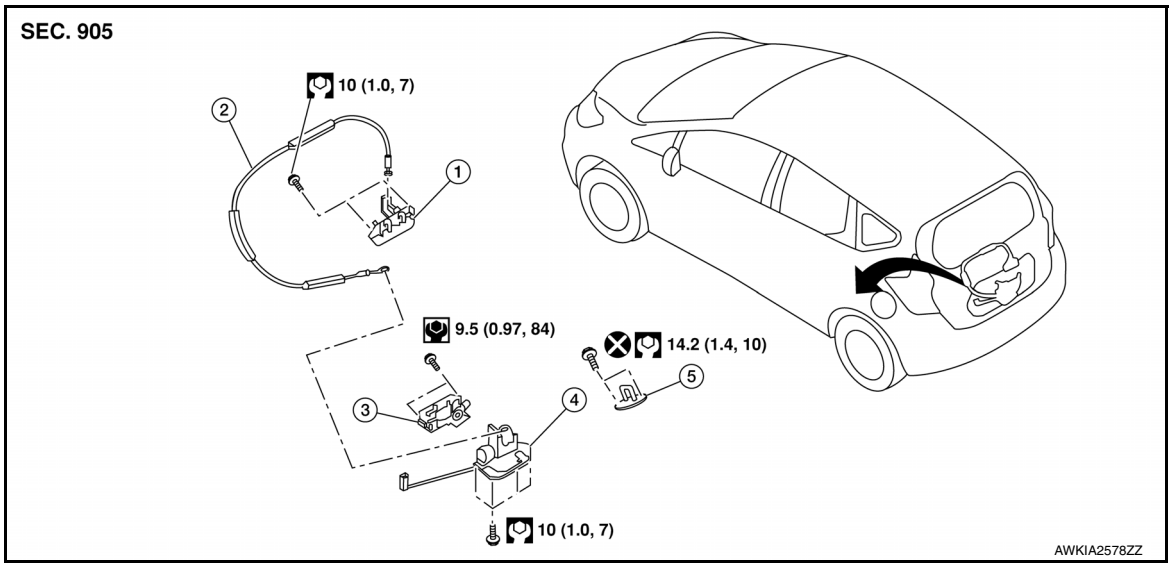

1.	Outside handle	2.	Back door lock cable	3.	Back door lock actuator
4.	Back door lock	5.	Door striker		

SEAT BELT, BUCKLES, RETRACTORS, ANCHORS AND ADJUSTERS

SEAT BELT, BUCKLES, RETRACTORS, ANCHORS AND ADJUSTERS : Inspection

INFOID:0000000009417546

Check the seat belt buckles, webbing, retractors, anchors and adjusters. Replace any seat belt assembly as necessary. Refer to SB-5, "Inspection".

- Check the seat belt anchors for loose bolts, damage, or excessive wear.
- Check the seat belt webbing for any damage, cuts, fraying, or excessive wear.
- Check the retractor for smooth operation.
- Check the function of the buckles by inserting the seat belt tongue and checking for proper engagement of the buckle and press the button on the buckle to check for proper release of the seat belt tongue.

CAUTION:

- **After any collision, inspect all seat belt assemblies, including retractors and other attached components, such as the guide rail set. NISSAN recommends replacing all seat belt assemblies in use during a collision, unless they are not damaged and are inspected to confirm they are operating properly after a minor collision.**
  Also inspect all seat belt assemblies that are not in use during a collision, and replace any components if damaged or not operating properly. The seat belt pre-tensioner should be replaced even if the seat belts are not in use during a frontal collision where the driver and passenger air bags have been deployed.
- **If any component of the seat belt assembly is suspected of being damaged or not operating properly, do not repair the component. Replace the components as an assembly.**
- **If the seat belt webbing is cut, frayed, or damaged then replace the seat belt assembly.**
- **Do not lubricate the seat belt buckle or tongue.**
- **When replacing any seat belt assembly always use a Genuine NISSAN seat belt assembly.**